F Series
Pushbutton Switches

Features/Benefits

- ***Up to 10 poles per module***
- ***Various contact terminals***
- ***Various mounting & switch ganging configurations***
- ***Mechanical indicator buttons***
- ***RoHS compliant***

Typical Applications

- ***Audio selection***
- ***Digital equipment interface***
- ***Medical equipment interface***

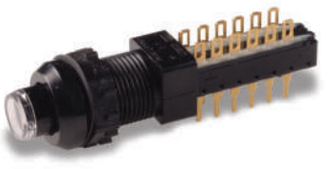

Specifications

SWITCHING POWER: F module max. AC/DC: Silver: 50 VA/15W, Gold: 1 VA/300 mW.

SWITCHING VOLTAGE: F module max. AC/DC: Silver: 125/30V, Gold: 50/30 V.

SWITCHING CURRENT: F module max. AC/DC: Silver: 0.5A/0.5A, Gold: 0.04A/0.01A.

CARRYING CURRENT: Max at du = 20C: Silver: < 2A, Gold: <0.5A.

DIELECTRIC STRENGTH (50 Hz, 1 min.): Chassis/contact: ^1500V Between contacts: ^1500V.

OPERATING LIFE "OA/EE" (24V/200mA): $>10^5$ operations "GR": >3.5 x 104 operations.

CONTACT RESISTANCE: Initial: Typical %10 mΩ, max. 20 mΩ After operating life: %100 mΩ

INSULATION RESISTANCE: $\wedge 10^9$ Ω between open contacts, $\wedge 10^9$ Ω between chassis and contacts.

CAPACITANCE (at f = 10 kHz): %0.7 pF between 2 contacts.

TOTAL TRAVEL/LATCHING TRAVEL: 4.7mm/3.3mm (.185 inch/ .130 inch).

All models and options are RoHS compliant and compatible.

NOTE: All models and options are RoHS compliant and compatible.

NOTE: Specifications and materials listed above are for switches with standard options. For information on specific and custom switches, consult Customer Service Center.

TYPICAL F OPERATING FORCE: 2U: 6.5N (650 grams); 4U: 6.5N (650 grams); 6U: 7.5N (750 grams); 8U: 9.0N (900 grams); 10U: 9.0N (900 grams).

EUROPEAN TYPICAL SF OPERATING FORCE: 2U: 3.5N±0.5N (350 grams±100 grams); 4U: 5N±1N (500 grams±100 grams); 6U: 6.5N±1N (650 grams±100 grams); 8U: 9.0N±1N (900 grams±100 grams).

OPERATING TEMPERATURE RANGE: -40°C to 70°C.

Materials

HOUSING: Polycarbonate UL 94V-0 or polyester UL 94V-0.

ACTUATOR: Polyester UL 94V-0.

MOVABLE CONTACTS: Bimetal brass, silver plated, gold plate over nickel.

STATIONARY CONTACTS & TERMINALS: Brass, silver plated, gold plated.

TERMINAL BOARD: Polyester UL 94V-0.

RETURN SPRING: Music wire.

TERMINAL SEAL: RTV adhesive sealant.

CHASSIS: Steel.

LOCKOUT PIN: Steel.

BLOCKERS: Steel.

Build-A-Switch

To order, simply select desired option from each category and place in the appropriate box. Available options are shown and described on pages A-88 thru A-95. For additional options not shown in catalog, consult Customer Service Center.

If requesting only a switch, select either a North American or European switch as noted below. Chassis and buttons are sold separately. If multiple stations are selected, we will assume all switches are the same unless noted otherwise.

North American Order Code - Switch Only

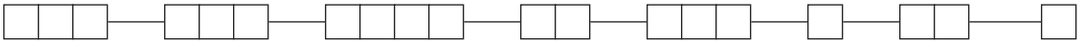

Designation
- **F** F Series
- **FLT** Light touch F series
- **ZF** Central mounted F series

Contact Arrangement
- **2U** 2PDT
- **4U** 4PDT
- **6U** 6PDT
- **8U** 8PDT
- **10U** 10PDT

Mechanical Function
- **OA** Momentary
- **EE** Alternate (push-push)
- **GR** Interlock
- **AOR** Central release
- **OASP** Momentary with lockout
- **GRSP** Interlock with lockout

Terminal Sealing
- **(NONE)** None
- **TB** Top/bottom

Terminal Style
- **(NONE)** Solder lugs & PC pins
- **01A** Cut solder lugs
- **01B** Cut PC pins, for other configurations, consult factory

Electrical Function
- **(NONE)** BBM Break-Before-Make
- **M** MBB (special) Make-Before-Break

Contact Material
- **(NONE)** Silver, AG
- **AU** Gold

Dress nut*
*Central mounted F series only
- **(NONE)** No dress nut
- **B** Black
- **C** Chrome

F Series
Pushbutton Switches

European Order Code - Switch Only

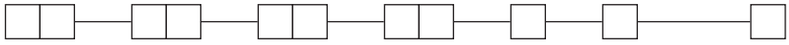

Designation
SF F Series
ZF Central mounted F series

Contact Arrangement
2U 2PDT
4U 4PDT
6U 6PDT
8U 8PDT

Mechanical Function
OA Momentary
EE Alternate (push-push)
GR Interlock

Terminal Style
(NONE) Solder lugs & PC pins
LB Cut solder lugs
PB Cut PC pins, for other configurations, consult factory

Electrical Function
(NONE) BBM

Contact Material
(NONE) Silver, AG
P Gold

Dress nut*
*Central mounted F series only

(NONE) No dress nut
B Black
C Chrome

*Minimum order quantities apply.

Order Code - Buttons

Solid Buttons

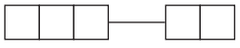

Style
F01 FMR
F02 FG*
F12 FSC
F13 FSD
F14 FU12
F15 FSB
F16 FE
F19 FA
F21 F001

Button Color
01 Black
02 White
03 Red
04 Light gray

Mechanical Indicator Buttons

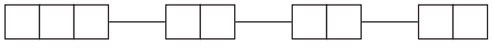

Style
F01 FA100
F02 FA101
F07 FA120
F08 FA201
F11 FA200*

Shell Color
01 Black

Out Position Color
01 Black

In Position Color
02 White
06 Yellow
07 Blue
08 Green
12 Orange

*Button options for central mounting configurations, use 'FG' for central mount with chrome dress nut, use 'FA200' for central mount with black dress nut.

BUTTON REMOVAL

A button of a push-push switch should only be removed in the "OFF" non-latching position.

Order Code - Chassis

To order a switch with chassis, create the switch part number listed above and add the Chassis part number configurator information at the end of the part number.

Note: We do not guarantee or recommend interlocking beyond 10 stations.

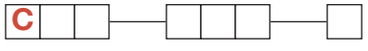

No. of Stations
01 thru 23 Comes with standard .094 (2,4mm) mounting holes
Note: Single station chassis available with special mounting configurations, consult factory.

Spacing between Stations
00 Single station
10 10mm
12.5 12.5mm
15 15mm
17.5 17.5mm
20 20mm

Special Acknowledgements
See note

*Minimum order quantities apply.

SWITCHES WITH STANDARD OPTIONS

F2UEE

CONTACT ARRANGEMENT	LENGTH DIM 'L'
2U	0.827 (21,00)
4U	1.300 (33,00)
6U	1.770 (45,00)
8U	2.240 (57,00)
10U	2.720 (69,00)

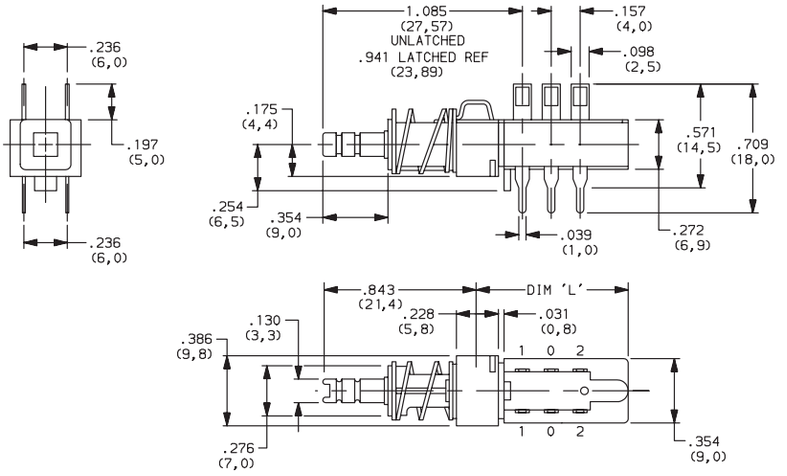

ZF2UEEBF11010108

CONTACT ARRANGEMENT	LENGTH DIM 'L'
2U	0.827 (21,00)
4U	1.300 (33,00)
6U	1.770 (45,00)
8U	2.240 (57,00)
10U	2.720 (69,00)

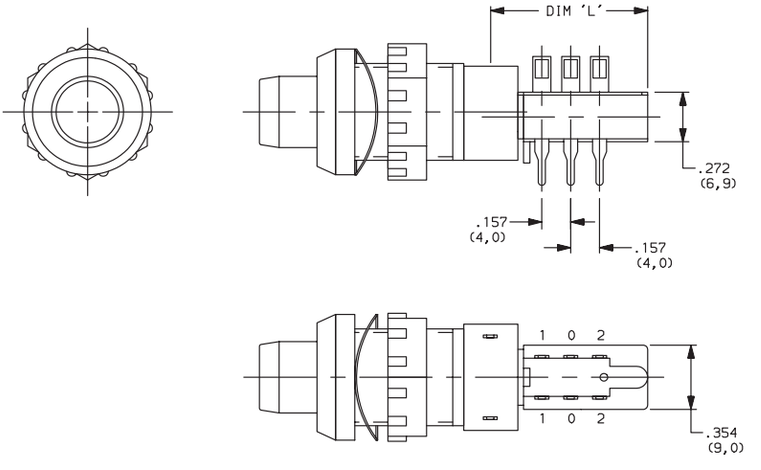

DESIGNATION



Designation, North America

F F Series
FLT Light touch F series
ZF Central mounted F series

Designation, Europe

SF F Series
ZF Central mounted F series

Third Angle Projection

Dimensions are shown: Inches (mm)
Specifications and dimensions subject to change

F Series
Pushbutton Switches

CONTACT ARRANGEMENT

OPTION CODE	NO. OF POLES	SCHEMATIC
2U	2PDT	
4U	4PDT	2X
6U	6PDT	3X
8U	8PDT	4X
10U	10PDT	5X

PC MOUNTING

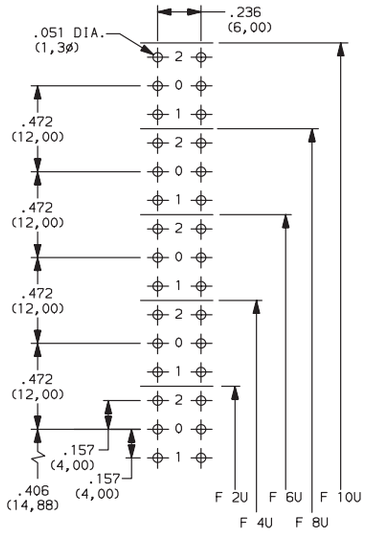

MECHANICAL FUNCTION

North America

OPTION CODE	FUNCTION
OA	Momentary
EE	Alternate (push-push)
GR	Interlock
AOR	Central release
OASP	Momentary with lockout
GRSP	Interlock with lockout

Europe

OPTION CODE	FUNCTION
OA	Momentary
EE	Alternate (push-push)
GR	Interlock

TERMINAL SEALING

(NONE) NO SEAL

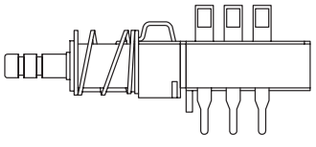

F2UEE shown in example above.

TB TOP & BOTTOM

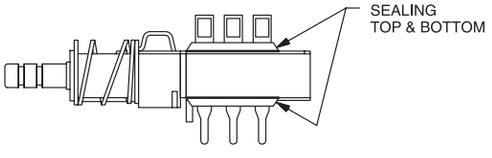

NOTE: Available for North America only

Third Angle Projection

Dimensions are shown: Inches (mm)
Specifications and dimensions subject to change

TERMINAL STYLE

(NONE) SOLDER LUGS & PC PINS

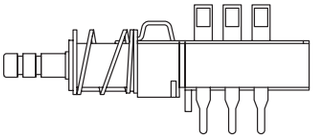

01A CUT SOLDER LUGS (North America)

LB CUT SOLDER LUGS (Europe)

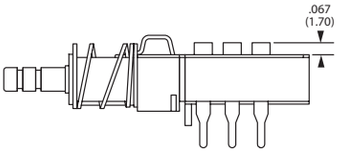

01B CUT PC PINS (North America)

PB CUT PC PINS (Europe)

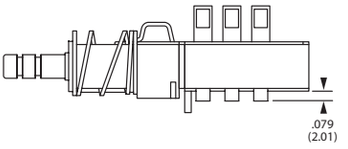

ELECTRICAL FUNCTION

OPTION CODE	FUNCTION
(NONE)	BBM Non-shorting
M	MBB Shorting (North America only)

CONTACT MATERIAL

NORTH AMERICA OPTION CODE	EUROPE OPTION CODE	RoHS COMPLIANT *	RoHS COMPATIBLE *	MATERIAL	RATING
(NONE)	(NONE)	YES	YES	SILVER, AG	50 VA/15 W; 125/30 V; 0.5/0.5 A
AU	P	YES	YES	GOLD	1 VA/300mW; 50/30 V; 0.04 A/0.01 A

* Note: See Technical Data section of this catalog for RoHS compliant and compatible definitions and specifications.

DRESS NUT

(NONE) NO DRESS NUT FOR F & F/LT DESIGNATIONS

B BLACK

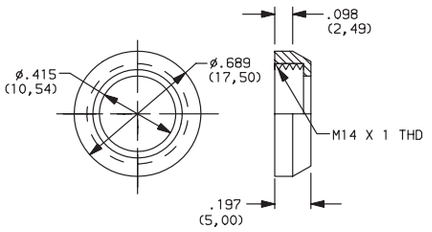

PANEL CUTOUT

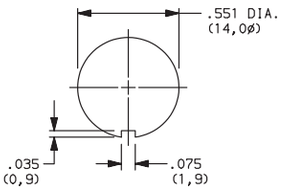

NOTE: Available with ZF designation and FA200 buttons.

C CHROME

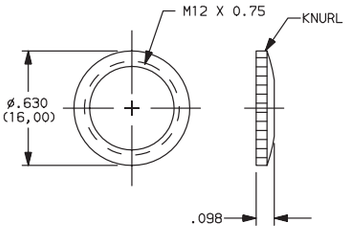

PANEL CUTOUT

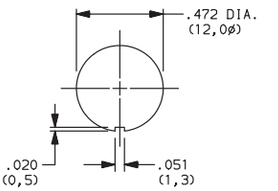

NOTE: Available with ZF designation and FG button.

Third Angle Projection

Dimensions are shown: Inches (mm)
Specifications and dimensions subject to change

F Series
Pushbutton Switches

SOLID BUTTON

COLOR
STYLE

STYLE

F01 FMR

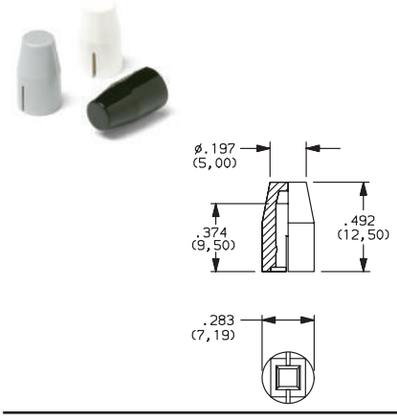

F02 FG

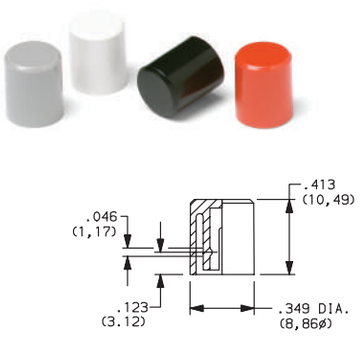

F12 FSC

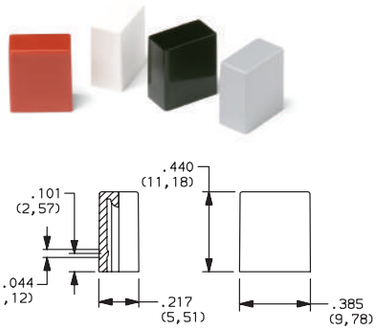

F13 FSD

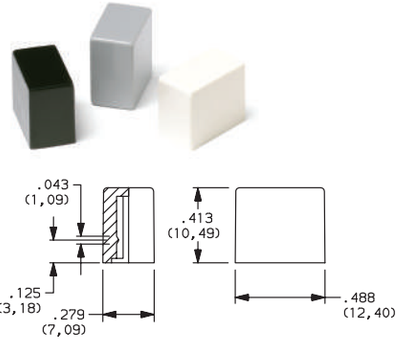

F14 FU12

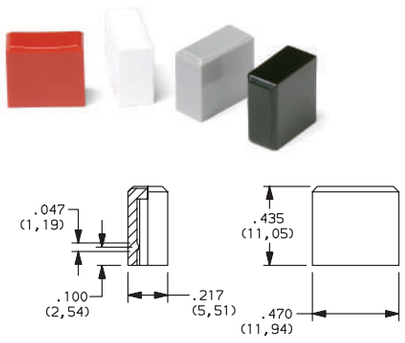

F15 FSB

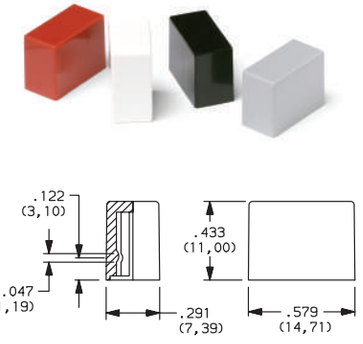

F16 FE

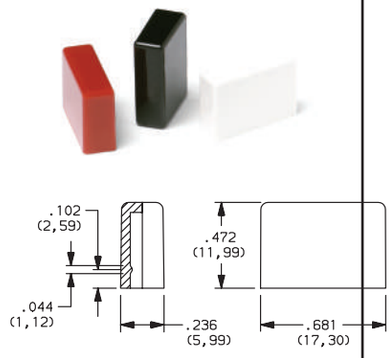

F19 FA

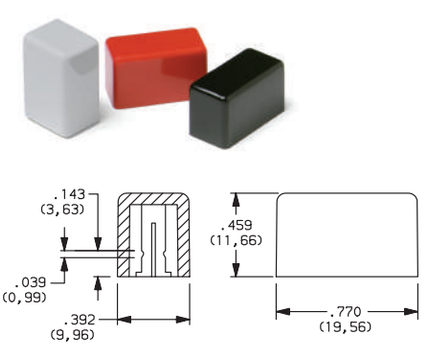

F21 F001

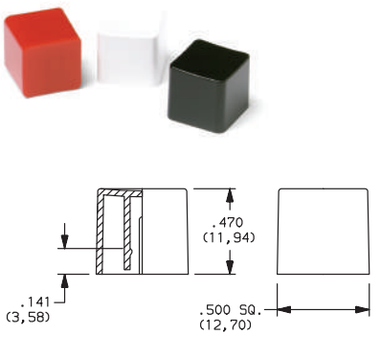

OPTION CODE	COLOR
01	BLACK
02	WHITE
03	RED
04	LT. GRAY

Dimensions are shown: Inches (mm)
Specifications and dimensions subject to change

MECHANICAL BUTTON

SHELL COLOR | IN POSITION COLOR
STYLE | OUT POSITION COLOR

STYLE

F01 FA100



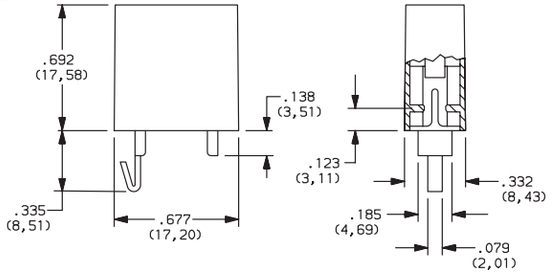

F02 FA101



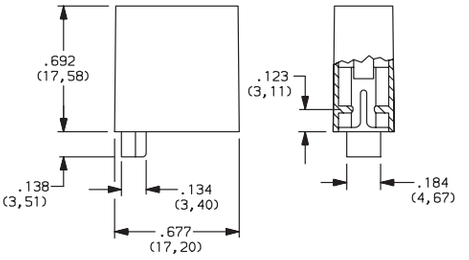

F07 FA120



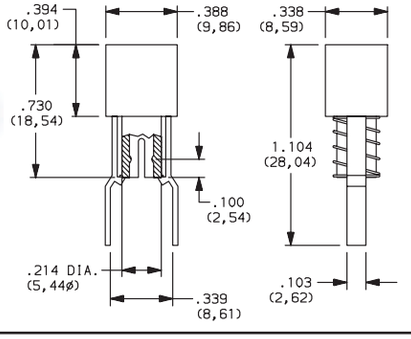

F08 FA201



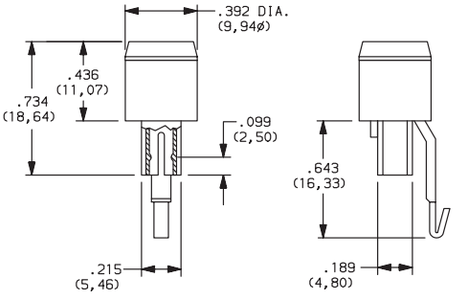

F11 FA200



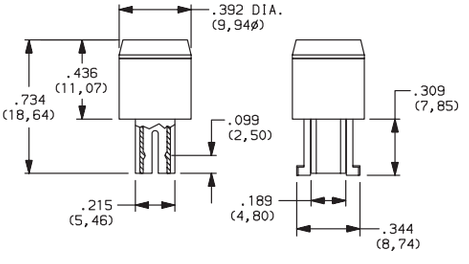

SHELL COLOR

01 BLACK

OUT POSITION COLOR

01 BLACK

IN POSITION COLOR

OPTION CODE	COLOR
02	WHITE
06	YELLOW
07	BLUE
08	GREEN
12	ORANGE

F Series
Pushbutton Switches

CHASSIS

SPACING
NO. OF STATIONS

NUMBER OF STATIONS

C00 Thru C10 Comes with standard 0.094 (2,44mm) mounting holes

NOTE: Single station chassis available with mounting configurations, consult factory.

SPACING

00 SINGLE STATION

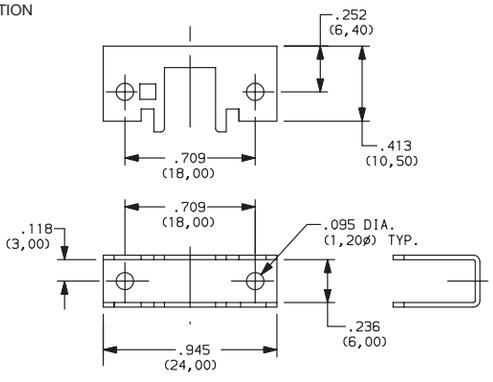

10 10mm

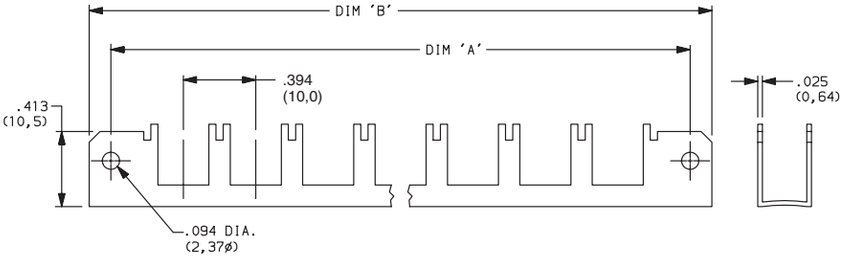

No. of Stations	Dim. 'A'	Dim. 'B'	Tolerance
2	1.182 (30,02)	1.418 (36,02)	0.005
3	1.575 (40,01)	1.811 (46,00)	0.010
4	1.969 (50,01)	2.205 (56,01)	0.010
5	2.363 (60,02)	2.599 (66,01)	0.010
6	2.757 (70,03)	2.993 (76,02)	0.015
7	3.150 (80,01)	3.386 (86,00)	0.015
8	3.544 (90,02)	3.780 (96,01)	0.015
9	3.938 (100,03)	4.174 (106,02)	0.015
10	4.331 (110,01)	4.567 (116,00)	0.015

12.5 12.5mm

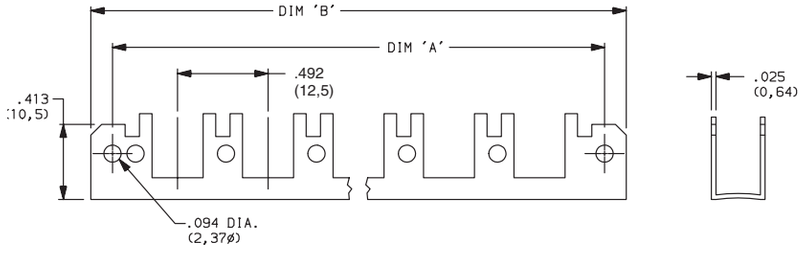

No. of Stations	Dim. 'A'	Dim. 'B'	Tolerance
2	1.200 (30,48)	1.436 (36,47)	0.005
3	1.692 (42,98)	1.928 (48,97)	0.010
4	2.184 (55,47)	2.420 (61,47)	0.010
5	2.676 (67,97)	2.912 (73,96)	0.010
6	3.169 (80,49)	3.405 (86,49)	0.015
7	3.661 (92,99)	3.897 (98,98)	0.015
8	4.153 (105,49)	4.389 (111,48)	0.015
9	4.645 (117,98)	4.881 (123,98)	0.015
10	5.137 (130,48)	5.373 (136,47)	0.015

Third Angle Projection

Dimensions are shown: Inches (mm)
Specifications and dimensions subject to change

CHASSIS

SPACING
NO. OF STATIONS

SPACING

15 15mm

No. of Stations	Dim. 'A'	Dim. 'B'	Tolerance
2	1.374 (34,90)	1.615 (41,02)	0.005
3	1.969 (50,01)	2.205 (56,01)	0.010
4	2.560 (65,02)	2.796 (71,02)	0.010
5	3.150 (80,01)	3.386 (86,00)	0.010
6	3.741 (95,02)	3.977 (101,02)	0.015
7	4.332 (110,03)	4.568 (116,03)	0.015
8	4.922 (125,02)	5.158 (131,01)	0.015
9	5.513 (140,03)	5.749 (146,02)	0.015
10	6.103 (155,02)	6.339 (161,01)	0.015

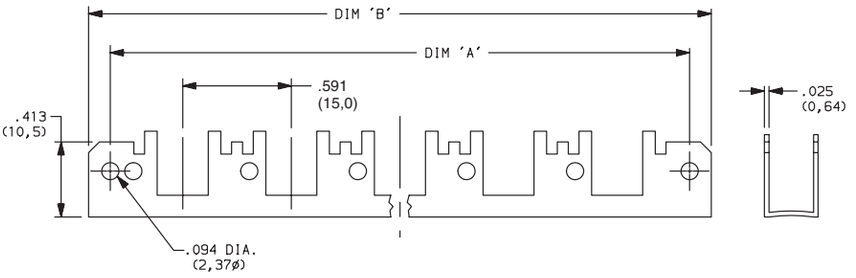

17.5 17.5mm

No. of Stations	Dim. 'A'	Dim. 'B'	Tolerance
2	1.477 (37,52)	1.713 (43,51)	0.005
3	2.166 (55,02)	2.402 (61,01)	0.010
4	2.855 (75,52)	3.091 (78.51)	0.010
5	3.544 (90,02)	3.780 (96,01)	0.010
6	4.233 (107,52)	4.469 (113,51)	0.015
7	4.922 (125,02)	5.158 (131,01)	0.015
8	5.611 (142,52)	5.847 (148.51)	0.015
9	6.300 (160,02)	6.536 (166,01)	0.015
10	6.989 (177,52)	7.225 (183,52)	0.015

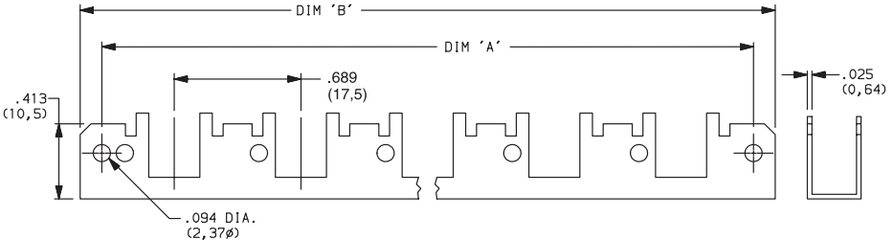

20 20mm

No. of Stations	Dim. 'A'	Dim. 'B'	Tolerance
2	1.575 (40,01)	1.811 (46,00)	0.005
3	2.363 (60,02)	2.599 (66,01)	0.010
4	3.150 (80,01)	3.386 (86,00)	0.010
5	3.938 (100,03)	4.174 (106,02)	0.010
6	4.725 (120,02)	4.961 (126,01)	0.015
7	5.512 (140,00)	5.748 (146,00)	0.015
8	6.300 (160,02)	6.536 (166,01)	0.015
9	7.087 (180,01)	7.323 (186,00)	0.015
10	7.875 (200,03)	8.111 (206,02)	0.015

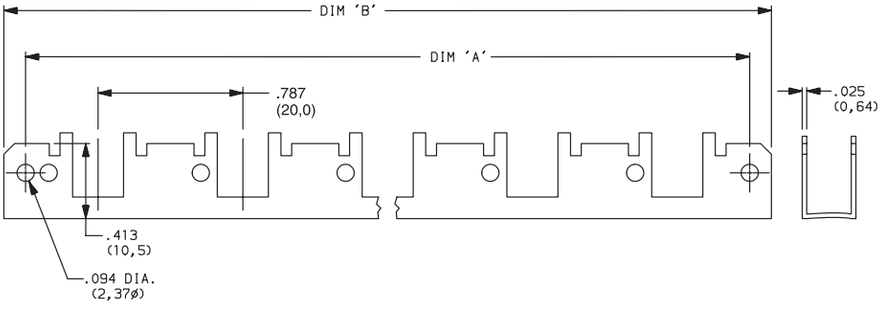

Third Angle Projection

Dimensions are shown: Inches (mm)
Specifications and dimensions subject to change