10603-026 PLASTIC FOOT WITHOUT TIP-UP FUNCTION, BLACK

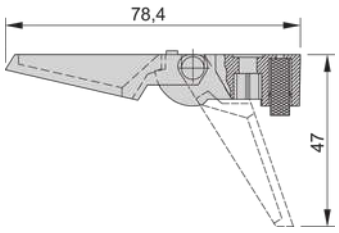

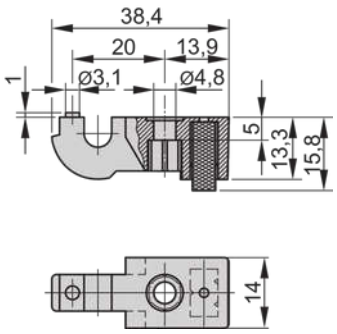

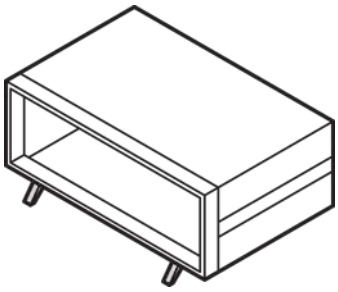

KEY FEATURES

- Can be used instead of standard round feet
- Load-carrying capacity: 25 kg per foot, max case weight 40 kg
- Mounting holes are provided in bottom covers of the cases
- Positioning of case is secured by anti-slip rubber inserts

PRODUCT ATTRIBUTES

- Product Type: Foot
- Type: Foot
- Works With: Cases
- Package Quantity: 10

ADDITIONAL PRODUCT DETAILS

The tip-up feet form plastic material enable mounting on the bottom plate of a case. Available with or without tip-up function. In black or gray.

Delivery is in standard pack multiples. Pricing is per individual item.

Please take into consideration that deliveries may be carried out in the stated SPQs (SPQ, e.g. 5 pieces, 10 pieces, 50 pieces, etc.). Differing order quantities (e.g. 2 pieces) may be changed to the next possible delivery quantity = Standard Pack Quantity.

CERTIFICATIONS



North America
All locations
+1.763.422.2661
Chat with us:
schroff.nvent.com

Europe
Straubenhardt, Germany
+49.7082.794.0
Betschdorf, France
+33.3.88.90.64.90
Warsaw, Poland
+48.22.209.98.35
Assago, Italy
+39.02.932.7141
Chat with us:
schroff.nvent.com

Asia
Shanghai, China
+86.21.2412.6943
Qingdao, China
+86.532.8771.6101
Singapore
+65.6768.5800
Shin-Yokohama, Japan
+81.45.476.0271
Chat with us:
schroff.nvent.com

Middle East & India
Dubai, United Arab Emirates
+971.4.378.1700
Bangalore, India
+91.80.6715.2001
Istanbul, Turkey
+90.216.250.7374
Chat with us:
schroff.nvent.com



Our powerful portfolio of brands:
nVent.com **CADDY ERICO HOFFMAN RAYCHEM SCHROFF TRACER**

© 2024 nVent. All nVent marks and logos are owned or licensed by nVent Services GmbH or its affiliates. All other trademarks are the property of their respective owners.

nVent reserves the right to change specifications without notice.