TOP VIEW OF ENCLOSURE

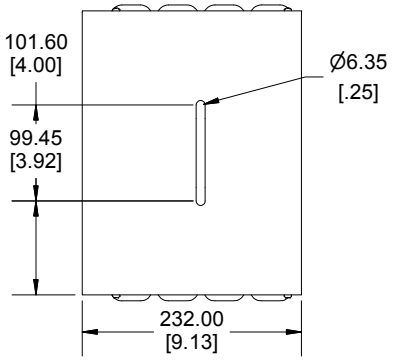

DETAIL A
SCALE 1 / 3
SIDE VENTS

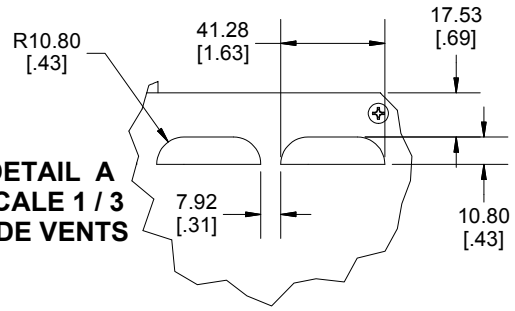

SIDE VIEW OF ENCLOSURE

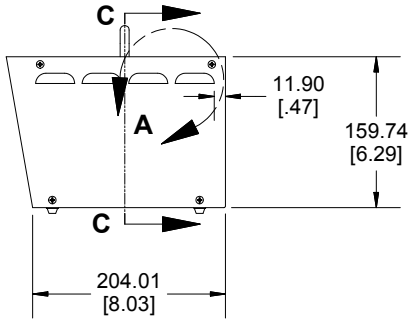

BACK VIEW OF ENCLOSURE

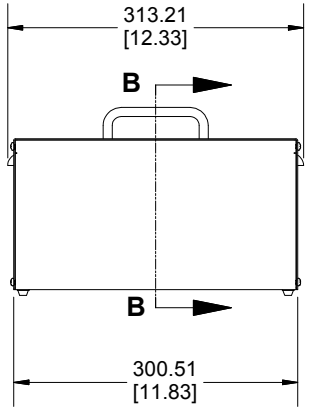

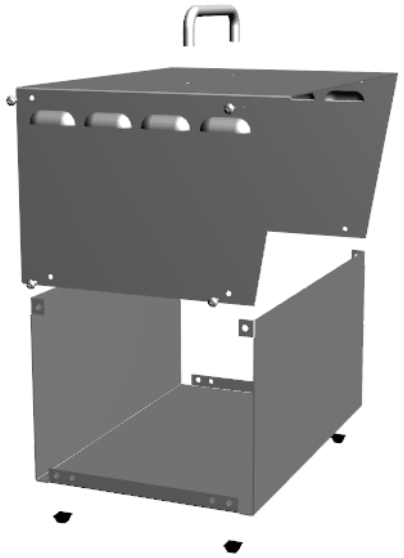

Enclosures can be Factory Modified (Milling, Drilling, Printing etc.)
Contact Factory mjm@hammondmfg.com for quotes
Solid models of this enclosure available in STEP or IGES.

NOTE
Case Includes Adhesive Rubber Feet, Handle Kit and Required Hardware.
Enclosure Case is Made of 0.05" Steel.

SECTION C-C
FRONT VIEW

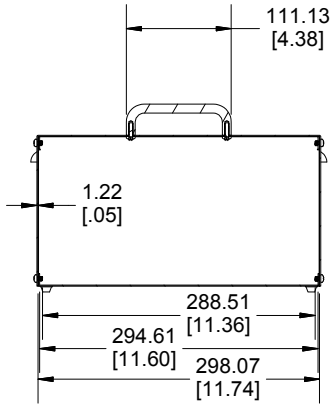

SECTION B-B
SIDE VIEW

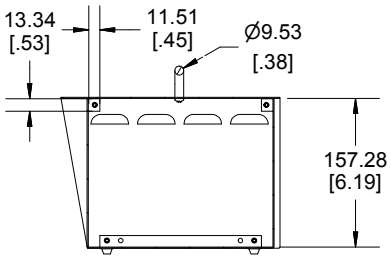

PART NUMBERS	
518-0920 Enclosure	
Smooth Light Grey Top Case Dark Satin Grey Base Case	518-0920
ACCESSORIES	
Plated Cover Screws (Pkg 50) [M4 x 6mm Self Tapping]	**SC19480-50**
Black Self-Adhesive Rubber Feet (Pkg 4)	**1421T3**

Dimensions:
mm
[inches]

HAMMOND MANUFACTURING™

518-0920

www.hammondmfg.com