sferaco
VALVES & FITTINGS

REF. 102

BRASS GATE VALVE PN16



Size :	DN 1/4" to 4“
Ends :	Female - Female BSP
Min Temperature :	-10°C
Max Temperature :	+ 80°C
Max Pressure :	16 Bars
Specifications :	Rotating non rising stem Inside screw stem Full bore
Materials :	Brass

Sferaco 90 rue du Ruisseau 38297 St Quentin Fallavier Tel: + 33 (0) 474.94.15.90 Fax: + 33 (0) 474.95.62.08 Internet: www.sferaco.fr E-mail : sferaco@sferaco.fr

Information provided as an indication and subject to possible modification

BRASS GATE VALVE PN16

SPECIFICATIONS :

- Full bore
- Rotating non rising stem
- Inside screw stem
- Brass
- Single wedge disc
- Female / Female BSP cylindrical ends
- EPDM packing
- **No tightness , loss factor : 0.5% of Kvs**

USE :

- Water distribution and watering
- Min and max Temperature Ts : - 10°C to + 80°C
- Max Pressure Ps : 16 bars
- Do not use for firefighting networks

FLOW COEFFICIENT Kvs (M3 / h) :

DN	1/4“	3/8“	1/2“	3/4“	1“	1“1/4	1“1/2	2“	2“1/2	3“	4“
Kvs (m3/h)	9.2	9.2	11	29	43	81	125	220	380	490	710

RANGE :

- Brass female/female threaded BSP cylindrical ends **Ref. 102** DN 1/4“ to DN 4“

BRASS GATE VALVE PN16

MATERIALS :

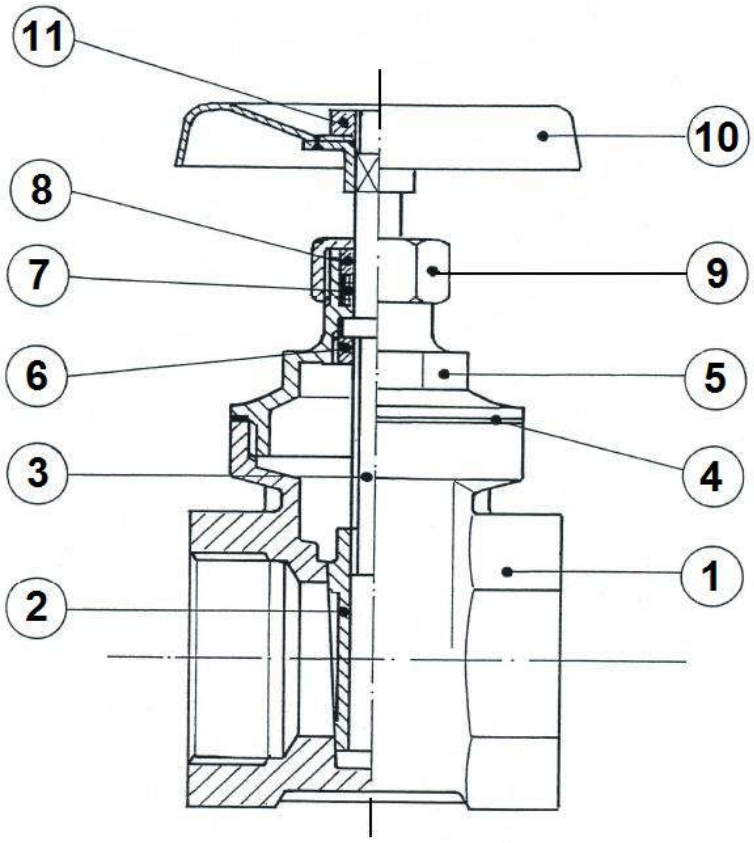

Item	Designation	Materials
1	Body	Brass CW 617 N according to EN 12165
2	Wedge	Brass CW 617 N according to EN 12165
3	Stem	Brass CW 614 N according to EN 12164
4	Bonnet gasket	Fibers
5	Bonnet	Brass CW 617 N according to EN 12165
6	Ring	Brass CW 614 N according to EN 12164
7	Packing	EPDM
8	Packing gland	Brass CW 614 N according to EN 12164
9	Gland nut	Brass CW 614 N according to EN 12164
10	Handwheel	Aluminium
11	Handwheel nut	Zinc-coated steel

Information provided as an indication and subject to possible modification

BRASS GATE VALVE PN16

SIZE (in mm) :

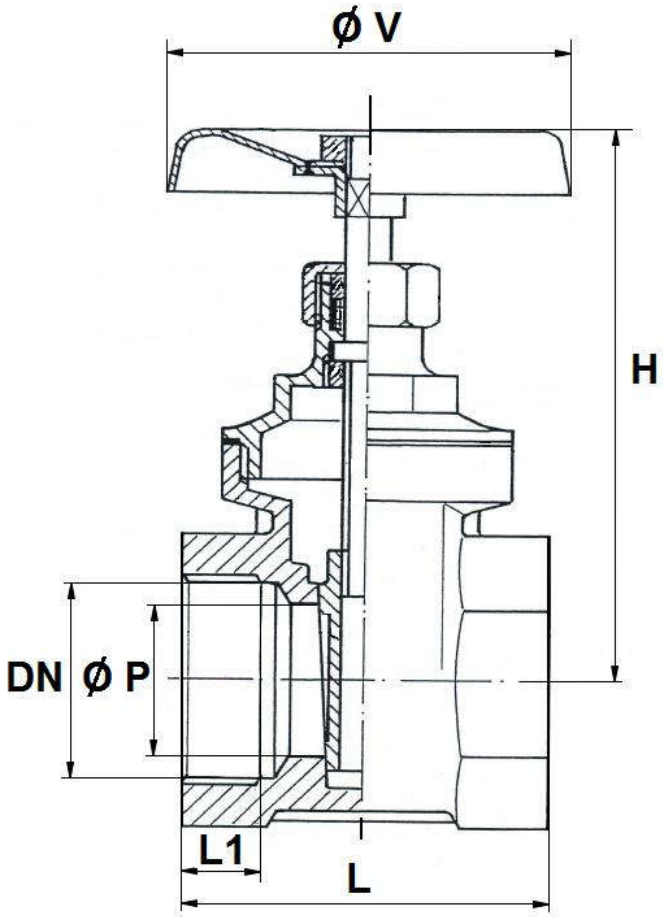

DN	1/4“	3/8"	1/2"	3/4"	1"	1"1/4	1"1/2	2"	2“1/2	3“	4“
Ø P	11	13	15	19	24	32	37	47	60	72	93
L	33	33	38	44	48	51	58	63	64	74	84
L1	8	8	9	10	11	12	13	13	13	14	16
H	67	67	68	78	91	108	125	143	175	200	235
Ø V	45	45	45	50	55	60	70	80	100	100	120
Weight (Kg)	0.166	0.148	0.176	0.256	0.364	0.530	0.702	1.078	1.718	2.308	4.298

Information provided as an indication and subject to possible modification

BRASS GATE VALVE PN16

STANDARDS :

- DIRECTIVE 2014/68/EU : Products excluded from directive (Article 1, § 2b)
- Threaded female / female BSP cylindrical ends according to ISO 228/1

ADVICE : Our opinion and our advice are not guaranteed and SFERACO shall not be liable for the consequences of damages.
The customer must check the right choice of the products with the real service conditions.

BRASS GATE VALVE PN16

INSTALLATION INSTRUCTIONS

GENERAL GUIDELINES :

- Ensure that the valves to be used are appropriate for the conditions of the installation (type of fluid,pressure and temperature).
- Be sure to have enough valves to be able to isolate the sections of piping as well as the appropriate equipment for maintenance and repair.
- Ensure that the valves to be installed are of correct strenght to be able to support the capacity of their usage.
- **Installation of all circuits should ensure that their function can be automatically tested on a regular basis (at least two times a year).**

INSTALLATION INSTRUCTIONS :

- **Before installing the valves,clean and remove any objects from the pipes** (in particular bits of sealing and metal) which could obstruct and block the valves.
- **Ensure that both connecting pipes either side of the valve (upstream and downstream) are aligned (if they're not,the valves may not work correctly).**
- **Make sure that the two sections of the pipe (upstream and downstream) match,the valve unit will not absorb any gaps.Any distortions in the pipes may affect the thightness of the connection,the working of the valve and can even cause a rupture.**To be sure,place the kit in position to ensure the assembling will work.
- **If sections of piping do not have their final support in place,they should be temporarily fixed.This is to avoid unnecessary strain on the valve.**
- It's recommended to operate the valve (open and close) 1 to 2 times per year

Information provided as an indication and subject to possible modification