SEALED DOME PUSHBUTTON SWITCHES

MOMENTARY ACTION, ATTRACTIVE & RUGGED FOR WET & DUSTY ENVIRONMENTS

The P9 Dome series pushbutton switches feature a contoured dome style pushbutton and share similar size and characteristics to the P7 series. Major differences are plastic housing construction and the availability of a shorting bar contact arrangement. There are two button versions: low button profile and high button profile. The P9 comes with a threaded case for hex nut mounting or with a snap-in case. The switch series features short behind panel depth. They also offer excellent mechanical and electrical performance while operating under severe conditions found in demanding applications.

The P9 Dome series is offered in dusttight and moistureproof sealed construction. One million mechanical operations and an electrical life of 25,000 operations at full rated load of 5 amps resistive or 3 amps inductive.

Watertight sealing is available simply by adding a "W" suffix to the part number to specify IP68S rating.

The P9 Dome series is available in standard and low-force double break snap-action and non-snap shorting bar models. All are momentary action. Special contact variations are available. High contact pressure and unique contact design provide low contact resistance for low level switching capability as well as full rated service. Solder, PC Pin, and 0.110" Quick Connect termination options are available.

Positive tactile feedback signaling the operator when the switch is operated is available in snap-action models but not shorting bar models.

The P9 Dome series is a quality precision switch designed for use in panels, control grips, computers, instruments, heavy equipment and other demanding applications where attractive, rugged pushbutton switches are required.

Features:

- **Attractive dome style button**
- **2 button heights**
- **Double break or shorting bar, momentary action**
- **All plastic housing & button construction**
- **Threaded body or snap-in panel mounting**
- **Withstands extreme shock & vibration**
- **Positive tactile feedback contact transfer on snap-action models**
- **Solder, PC Pin & 0.110" Quick Connect terminal styles**
- **Moistureproof & dusttight to IP64 or watertight to IP68S**
- **UL recognized & CSA certified**
- **RoHS/WEEE/Reach compliant**

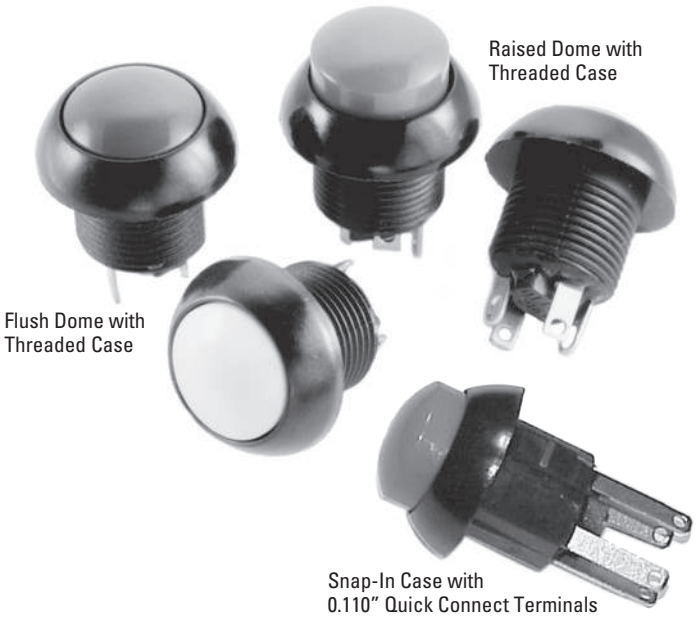

Standard Characteristics/Ratings:		
ELECTRICAL RATINGS:	**Sea Level @ 28VDC or 115VAC, 60/400Hz**	
Load	**N.O./N.C.**	**2 Circuit**
Resistive	5A	4A
Inductive	3A	2A
DWV	1050Vrms	
Electrical Life:	25,000 cycles 5A @ 28VDC resistive snap-action	
Mechanical Life:	1,000,000 cycles	
Seal:	IP64 or IP68S	
Operating Temp Range:	-40°C to +85°C	
Operating Force:	Standard: 1.7 lbs. +/- 0.5 lb. Low Force: 12 oz +/- 4 oz Shorting Bar: 18 oz +/- 6 oz	
Total Travel:	0.080 inches max	
Overtravel:	0.010 inches min	
MATERIALS:		
Case:	Thermoplastic	
Button:	Thermoplastic	
Terminals:	Brass with gold over silver	
Terminal Hardware:	None provided	
Mounting Hardware:	Hex nut, lockwasher Panel gasket when applicable	

SEALED DOME PUSHBUTTONS

CHOICE OF SNAP-ACTION & SHORTING BAR ACTION

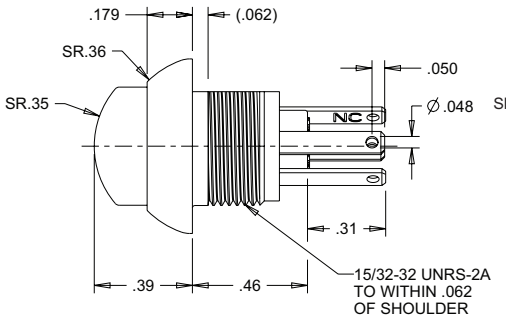

Raised Dome Button Style

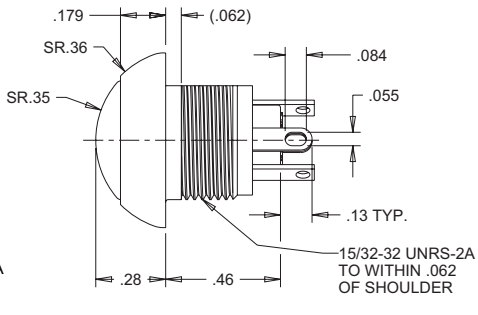

Flush Dome Button Style

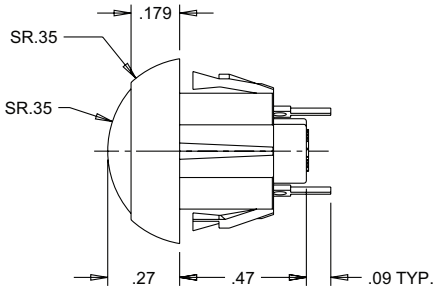

Snap-In Case
(PC Terminals Shown)

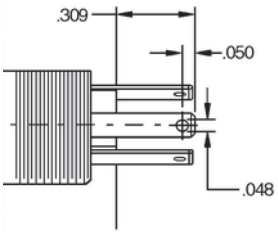

0.110" Quick Connect Detail

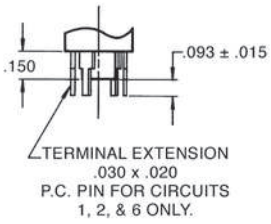

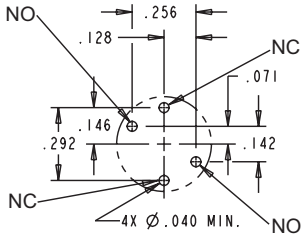

Component Side
P.C. Mounting Pattern
(As viewed from switch bottom)

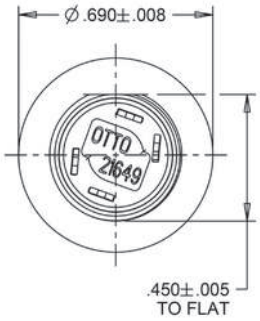

Solder Terminals
(Terminals not orientated to flat)
Threaded Case

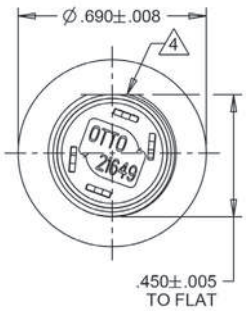

PC Pin
(Orientated to case flats as shown)
Snap-In Case

Recommended Panel Openings		
*Panel Thickness	Recommended 0	DIM. Across D-Flat
0.024*	0.505	0.460
0.031	0.505	0.460
0.118*	0.505	0.460
0.125	0.505	0.460

* Must use panel gasket 401669 supplied with the switch.

- Snap-in case allows front panel mounting into 0.024" or 0.118" thick panels using panel gasket 401669 or into 0.031" and 0.125" thick panels
- 0.110" Quick Connect terminals allow reliable, solderless wire connections
- Flush Neoprene Black Boot P/N 402339
- Raised Neoprene Black Boot P/N 402246
- Flush Silicone Translucent Boot P/N 402599-1
- Raised Silicone Translucent Boot P/N 402611-1

ORDERING INFORMATION:

Select the OTTO P9 series features that match your specific application. Standard and special features are shown at right. Specify your choice by building the OTTO Part Number code.

Example: P9-211121 specifies raised dome style button, threaded case, solder terminals, N.O. circuit form, standard snap-action, black case/bezel, red button.

P9 PART NUMBER CODE

P9 – X X X X X X *

Button & Case Style***
1. Flush Dome & Threaded Case, Std. Finish
2. Raised Dome & Threaded Case, Std. Finish
3. Flush Dome & Snap-In Case, Std. Finish
4. Raised Dome & Snap-In Case, Std. Finish
5. Flush Dome & Threaded Case, Matte Finish
6. Raised Dome & Threaded Case, Matte Finish
7. Flush Dome & Snap-In Case, Matte Finish
8. Raised Dome & Snap-In Case, Matte Finish

Terminal Style
1. Solder
2. PC Pin
3. 0.110" Quick Connect

Circuit Form
1. N.O.
2. N.C. ①
3. 2 Circuit ①

Switch Action
1. Standard Snap-Action
2. Low Force Snap-Action

Case/ Bezel Color
1. Red
2. Black
3. Orange**
4. Yellow**
5. Green**
6. Blue**
7. Violet**
8. Gray**
9. White

Button Color
1. Red
2. Black
3. Orange
4. Yellow
5. Green
6. Blue
7. Violet
8. Gray
9. White

① Not available in Shorting Bar version.
* Add "W" suffix for watertight to IP68S (will include panel gasket)
** Contact factory for minimum requirement.
*** Contact factory for std./matte button/case combination options.

Specifications Subject To Change Without Notice