GEFRAN

LT
RECTILINEAR DISPLACEMENT TRANSDUCER



Main features

- *The transducer has been improved in order to guarantee greater reliability under all conditions*
- *A sturdier structure makes the LT series even stronger for applications with heavy vibration*
- *Installation is made simpler by the absence of electrical signal variation in output, outside the Theoretical Electrical Stroke*
- *The new grooves provide an excellent alternative to the usual system of fastening with brackets*
- *Ideal for applications on plastic injection presses, vertical presses, and on many other processing machines*

TECHNICAL DATA

Useful electrical stroke (C.E.U.)	50/75/100/130/150/175/200/225/275/300/350/375/400/450/500/600/650/750/900
Independent linearity (within C.E.U.)	± 0.05%
Resolution	Infinite
Repeatability	0.01 mm
Electrical connections LTM LTH LTB LTF	4-pole connector DIN43650 3-pole connector 5-pole connector DIN43322 1 meter 3-pole shielded cable
Displacement speed	Standard ≤ 10 m/s
Protection level	IP60 (IP65 on request)
Life	> 25x10^6 m strokes, or > 100x10^6 maneuvers, whichever is less (within C.E.U.)
Displacement force	3,5N (typical) IP60 version 15N (typical) IP65 version
Vibrations	5...2000Hz, Amax =0.75 mm amax. = 20 g
Shock	50 g, 11ms.
Acceleration	200 m/s^2 max (20g)
Tolerance on resistance	± 20%
Recommended cursor current	< 0.1 μA
Maximum cursor current	10mA
Maximum applicable voltage	60V
Electrical isolation	>100MΩ at 500V=, 1bar, 2s
Dielectric strength	< 100μA at 500V~, 50Hz, 2s, 1bar
Dissipation at 40°C (0W at 120°C)	3W
Thermal coefficient of resistance	-200...+ 200 ppm/°C typical
Actual Temperature Coefficient of the output voltage	≤ 5 ppm/°C typical
Working temperature	-30...+100°C
Storage temperature	-50...+120°C
Material for transducer case	Anodised aluminium Nylon 66 G
Material for pull shaft	Stainless steel AISI 303
Mounting	Brackets with adjustable distance between centers or with M5 screw ISO4017-DIN933

MECHANICAL DIMENSIONS

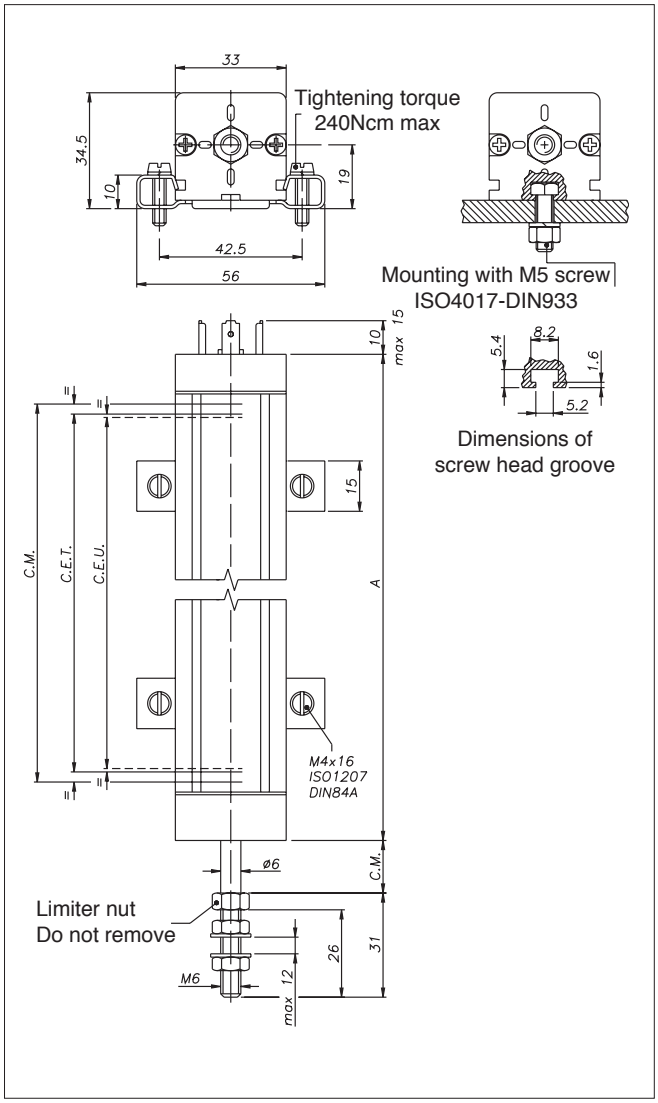

Important: all the data reported in the catalogue linearity, lifetime, temperature coefficient are valid for a sensor utilization as a ratiometric device with a max current across the cursor Ic ≤ 0.1 μA

ELECTRICAL / MECHANICAL DATA

MODEL		50	75	100	130	150	175	200	225	275	300	350	375	400	450	500	600	650	750	900
Useful electric stroke (C.E.U.) +3/-0	mm	50	75	100	130	150	175	200	225	275	300	350	375	400	450	500	600	650	750	900
Theoretical electrical stroke (C.E.T.) ±1	mm	C.E.U. + 3						C.E.U. + 4				355	380	406	457	508	609	660	762	914
Resistance (C.E.T.)	kΩ	5						5				5	5	5	5	5	5	5	10	10
Mechanical stroke (C.M.)	mm	C.E.U. + 9						C.E.U. + 10				361	386	412	463	518	619	670	772	924
Case length (A)	mm	C.E.U. + 63						C.E.U. + 64				415	440	466	517	572	673	725	826	978

ELECTRICAL CONNECTIONS

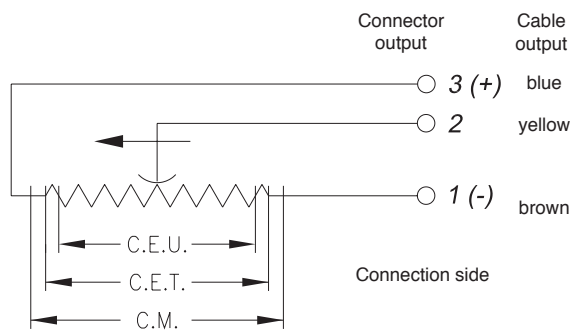

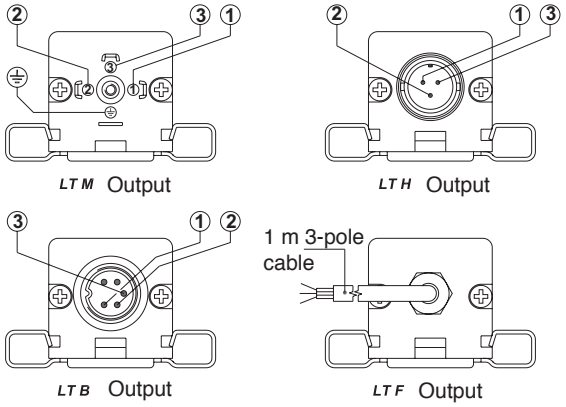

• INSTALLATION INSTRUCTIONS

• Make the specified electrical connections (DO NOT use the transducer as a variable resistance)

• When calibrating the transducer, be careful to set the stroke so that the output does not drop below 1% or rise above 99% of the voltage level.

ORDER CODE

Displacement transducer	**LT**

4-pole connector output DIN43650 ISO4400	**M**
3-pole connector output	**H**
5-pole connector output DIN43322	**B**
3-pole PVC cable output 3x0,25 1m	**F**

Model	
IP60 version	**S**
IP65 version	**P**

No certificate attached	**0**
Linearity curve to be attached	**L**

Cable length: 1 m	**0**
Cable length: 2 m	**2**
Cable length: 3 m	**3**
Other lengths on request	**---**

Color of plastic heads (green)	**0**
Color of plastic heads (black)	**N**

Example:**LT - M - 0300 - S 000X000X00**

LTdisplacement transducer, 4-pole connector output DIN43650 - ISO 4400, useful electrical stroke (C.E.U.) 300mm. IP60 protection, no certificate attached, green plastic components.

ACCESSORIES

STANDARD	**Code**
LT mounting kit, 2 brackets, screws	**PKIT009**
ON REQUEST	**Code**
LTM 4-pole 90° radial female connector DIN43650 IP65 PG9 clamp for ø6-ø8mm cable	**CON006**
LTH 3-pole axial female connector IP40 clamp for ø4-ø6mm cable	**CON002**
LTB 5-pole axial female connector DIN43322 IP40 clamp for ø4-ø6mm cable	**CON011**
LTB 5-pole axial female connector DIN43322IP65 PG7 clamp for ø4-ø6mm cable	**CON012**
LTB 5-pole 90° radial female connector DIN43322 IP40 clamp for ø4-ø6mm cable	**CON013**
Ball connection joint	**PKIT015**

GEFRAN spa reserves the right to make any kind of design or functional modification at any moment without prior notice

GEFRAN spa
via Sebina, 74
25050 PROVAGLIO D'ISEO (BS) - ITALIA
tel. 0309888.1 - fax. 0309839063
Internet: http://www.gefran.com