efector140

KT5012

KTRBFNUKBPKG/2M/SA/AM

Touch sensors

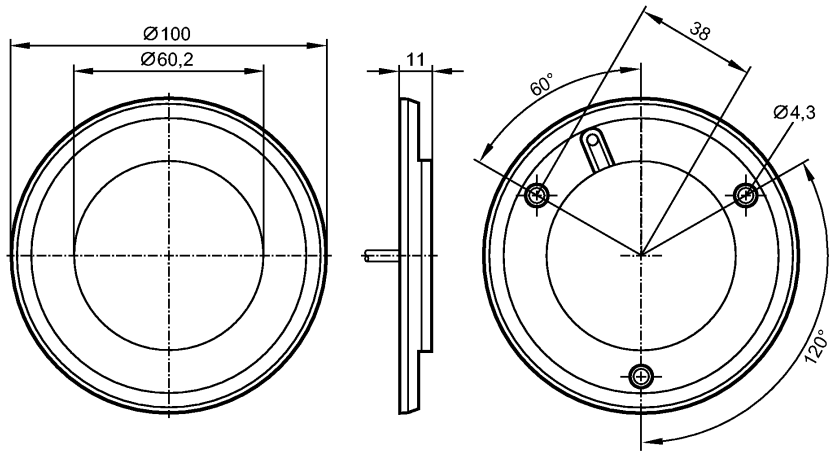

Made in Germany

CE

Product characteristics		
Touch sensor		
Plastic housing		
Cable		
Touch sensor with static evaluation principle		
Without coloured surround		
Electrical data		
Electrical design		DC PNP
Operating voltage	[V]	24 DC (12...36 DC)
Current consumption	[mA]	30
Protection class		III
Reverse polarity protection		yes
Overvoltage protection	[V]	yes
Outputs		
Output function		normally open
Current rating	[mA]	500
Short-circuit proof		yes
Environment		
Ambient temperature	[°C]	-40...85
Protection		IP 69K; on the front
Tests / approvals		
MTTF	[Years]	4904
Mechanical data		
Housing materials		window: Polyamide (Grilamid TR 90UV); fixing ring: polycarbonate-ABS black
Weight	[kg]	0.138
Displays / operating elements		
Output status indication	LED	Red
Operation	LED	green
Display		8 LED
Electrical connection		
Connection		PUR cable / 2 m

Wiring

KT5012

KTRBFNUKBPKG/2M/SA/AM

1: brown
3: blue
4: black

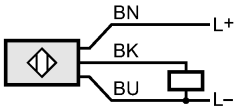

Accessories

Accessories (optional)	surround in different colours

Remarks

Pack quantity	[piece]	1