MICON 5, round plunger 8 mm, GH 6.5 mm



fields of application

- Measurement-control-regulation
- Mechanical and system engineering
- Automotive
- Signalling systems
- Vehicle construction
- Handheld terminals

description

The wide selection of standard plungers in different shapes and colors guarantees a versatile range of applications for the MICON 5 tactile switch.

technical data

general

Color	weiß
Collar shape	round
illuminated	No
Packaging unit	500 pcs.
net weight	0.1 g
MOQ order	500 pcs.
RoHS compliant	Yes
REACH compliant	Yes
Component material	Kunststoff

mounting diameters

Outside dimension, length	3.95 mm
Outside dimension, width	8 mm
Outside dimension, height	8 mm
Plunger length L	3.95 mm
Support height A	2.55 (SMT) / 2.5 (THT) mm
Total height GH	6.5 mm

direct links

- RAFI eCatalog

The information in this data sheet only contains general descriptions and / or performance features, which may not apply precisely as described to the respective application, and which my change due to further product enhancements. The technical data, illustrations and other information about our products are the mere results of individual technical testing. These descriptions and other product features are only binding if they expressly agreed upon at the time of the conclusion of a binding contract. In all other cases, we reserve the right to make technical changes as well as changes of availability. Pictures and other graphic illustrations are approximations only. All product names may be trademarks or brand names of the RAFI Group or any other sub-supplier of RAFI. The use of such by any third parties for their own purposes may infringe the rights of the respective entity holding those rights.

RAFI GmbH & Co. KG

Ravensburger Str. 128-134
88276 Berg / Ravensburg
Germany
www.rafi-group.com,
info.headquarters@rafi-group.com

5.46.001.125/0200

drawings

Dimensioned drawing

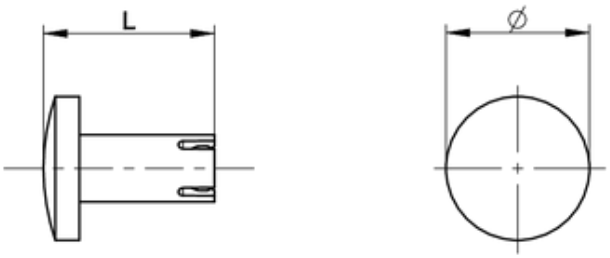

System drawing

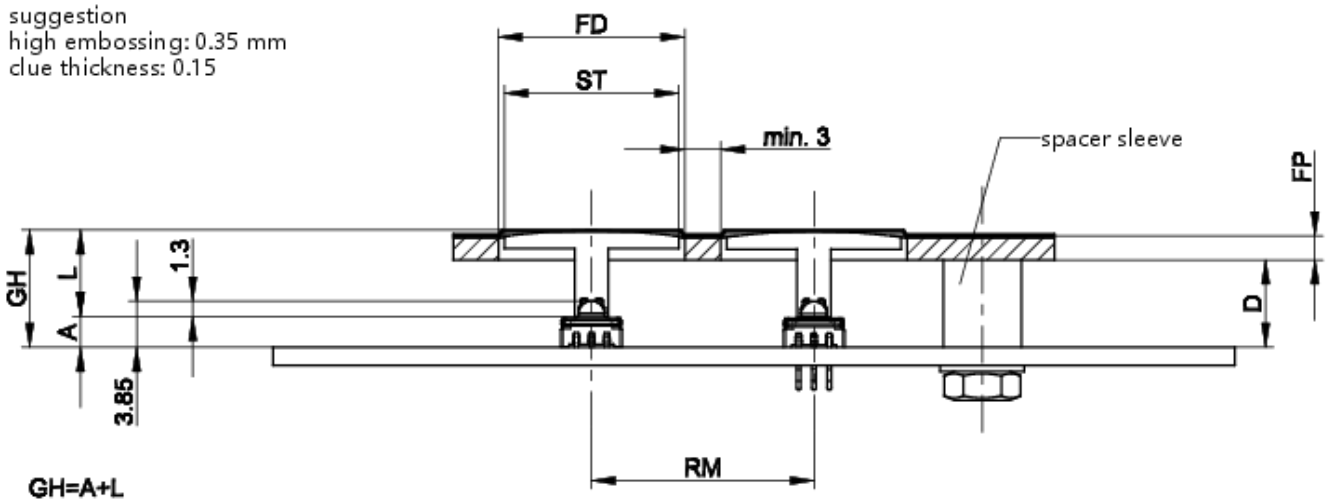

The information in this data sheet only contains general descriptions and / or performance features, which may not apply precisely as described to the respective application, and which my change due to further product enhancements. The technical data, illustrations and other information about our products are the mere results of individual technical testing. These descriptions and other product features are only binding if they expressly agreed upon at the time of the conclusion of a binding contract. In all other cases, we reserve the right to make technical changes as well as changes of availability. Pictures and other graphic illustrations are approximations only. All product names may be trademarks or brand names of the RAFI Group or any other sub-supplier of RAFI. The use of such by any third parties for their own purposes may infringe the rights of the respective entity holding those rights.

RAFI GmbH & Co. KG

Ravensburger Str. 128-134
88276 Berg / Ravensburg
Germany
www.rafi-group.com,
info.headquarters@rafi-group.com