A9408340

SHELL-TYPE CASES O 155, Vers. I

Two-part plastic case with open front and open rear. Front panel (as accessory) can be inserted into the front guide grooves. Guide ridges and fastening pillars for mounting of PCBs in top and base.

Version
Without battery compartment

Supply
1 top and base part, assembly kit



TECHNICAL DATA

Material	ABS (UL 94 HB)
Colour	off-white RAL 9002
Standards	RoHS compliant, REACH compliant

Width	95 mm
Depth	158 mm
Height	45 mm
PCB length, base	142 mm
PCB width, base	77 mm
PCB length, top	142 mm
PCB width, top	77 mm

Please take the dimensions from current parts. These are subject to material- and manufacturing-specific tolerances.

PURCHASING DATA

Weight/1 part	142 g
Customs tariff number (OKW product)	39269097
Country of manufacture	Germany

A9408340

SHELL-TYPE CASES O 155, Vers. I

CUSTOMISING OPTIONS

What else do you need to create your own personal product? We can supply our enclosures and tuning knobs fully modified to suit your electronic components and design requirements. Please advise for anything else we can do for you.

Customising options for A9408340


Machining


Lacquering



Printing



Laser marking


Special material


EMC shielding


Installation / Assembly of accessories

A9408340

SHELL-TYPE CASES O 155, Vers. I

ACCESSORY TO COMPLETE



A9108123
Front / rear panel V, O 155
Acrylic glass
red transparent
81.9x35.6x1mm

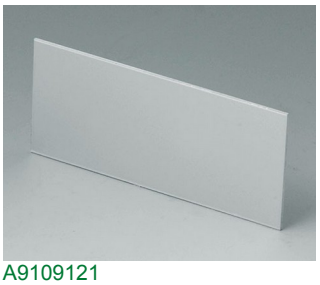

A9109121
Front / rear panel V, O 155
Aluminium
matt anodised
81.9x35.6x1mm

ACCESSORY "PROTECTION"



A9108120
Contact-strips V, O, G 155
Aluminium

ACCESSORY "WALL/HOLDER"



A9204108
Wall mounting brackets
PA 6
pebble grey RAL 7032



B1360048
Wall suspension elements
ABS (UL 94 HB)
pebble grey RAL 7032

A9408340

SHELL-TYPE CASES O 155, Vers. I

ACCESSORY "CARRYING"



A9100002
Ring eyelet
PA 6
volcano

ACCESSORY "SCREWS"



A0306031
Self-tapping screws 3 x 6 mm
(PZ1)

ACCESSORY



A9210290
Anti-slide feet 9.5 x 3.8 mm
transparent

Subject to technical modification without notice. © by OKW Gehäusesysteme, Buchen/Germany.

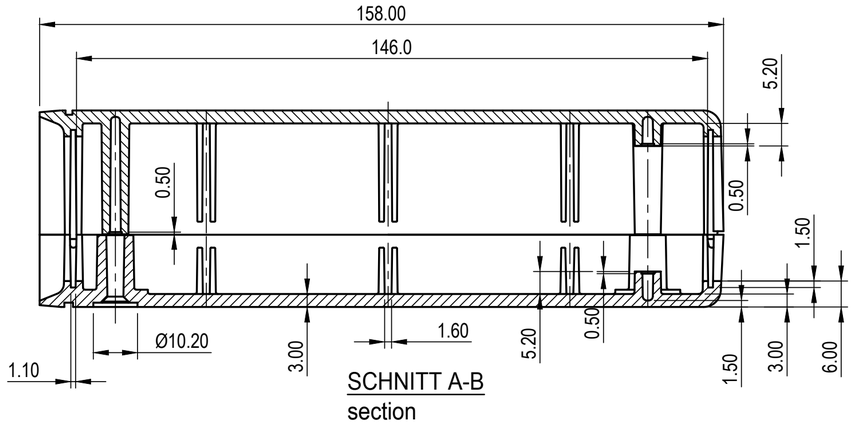

SCHNITT A-B
section

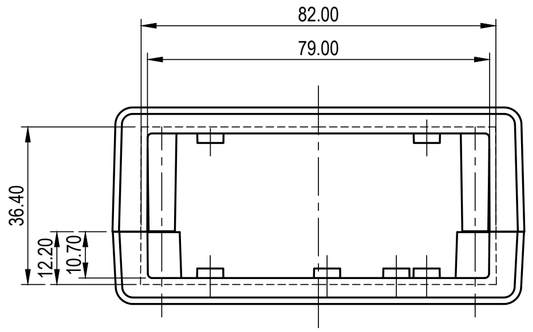

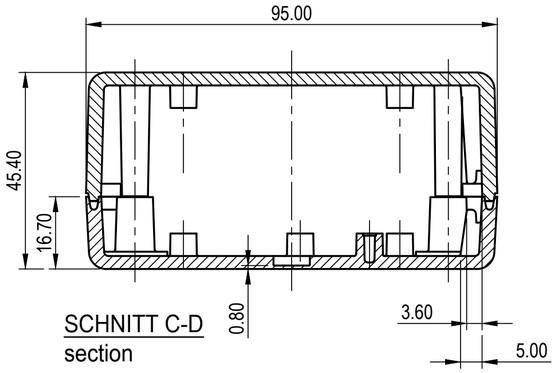

SCHNITT C-D
section

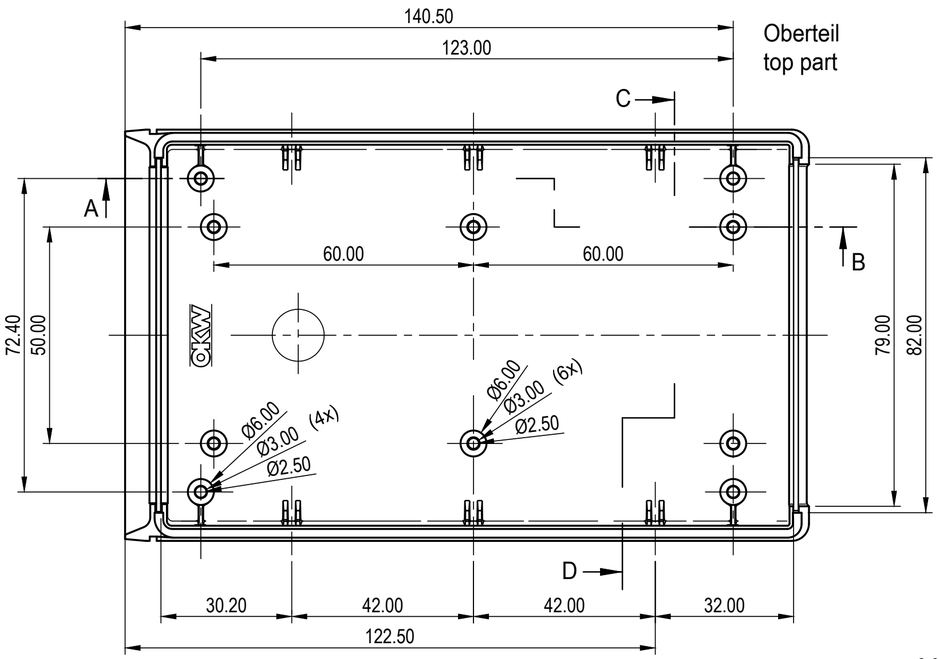

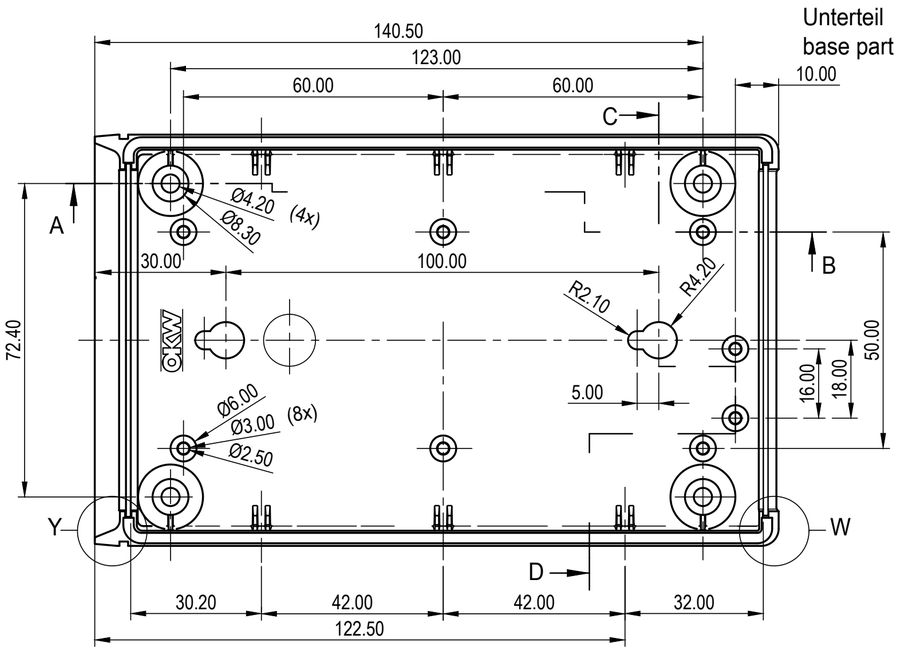

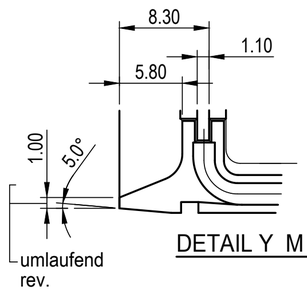

DETAIL Y M 2.5:1

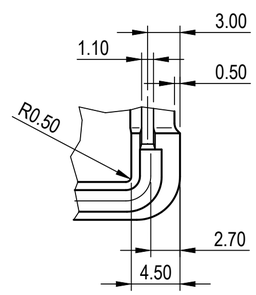

DETAIL W M 2.5:1

Z (PZ1)

max. Platinengröße: Oberteil 77 x 142 mm, Unterteil ohne Batteriefach 77 x 142 mm (Domaussparung unberücksichtigt)
max. size of PCB: top part 77 x 142 mm, base part without battery compartment 77 x 142 mm (cutouts for pillars not taken into consideration)

Bitte die Maße an aktuellen Teilen abnehmen.
Diese unterliegen material- und produktionsspezifischen Fertigungstoleranzen

Please take the dimensions from current parts.
These are subject to material- and manufacturing-specific tolerances.

Informationskopie
wird nicht aktualisiert

Copy for Information
will not be updated

Technische Änderungen vorbehalten. Irrtümer und Druckfehler begründen keinen Anspruch auf Schadenersatz. Wichtige Einbaumaße bitte direkt mit dem aktuellen Produkt abstimmen.
Subject to technical modification without prior notice. Typographical and other errors do not justify any claim for damages. All dimensions should be verified using an actual moulded part.
Sous reserve de modifications techniques. Toute erreur ou faute d'impression ne justifie aucune demande d'indemnisation. Nous prions les clients de verifier les dimensions des composants avec les boitiers avant le montage.

Erst. am:	21.05.2003	Toleranzen: DIN 16901 T130	Status: ÄNDERUNG
Erst. von:	Hasselb		
Freig. am:		Volumen:	Zeichnungsart: KUNDE
Freig. von:			
Revision:	05		

DIN 6 Teil 2

This document contains proprietary information of OKW Gehäusesysteme GmbH and is tendered subject to the conditions that the information be retained in confidence not be reproduced or copied and not be used or incorporated in any product.

Maßstab: 1:1

OKW GEHÄUSE SYSTEME

SCHALENGEHAEUSE O 155
SG 155, Vers. I, high / flat

A9408340

Für dieses Dokument behalten wir uns alle Urheberrechte vor. Es darf auch auszugsweise weder vervielfältigt noch Dritten in irgendeiner Form zugänglich gemacht werden.

Dateiname: 00000988