Product datasheet

Specifications



inductive sensor XS6 M12 - L54mm - brass - Sn4mm - 12..48VDC - cable 5m

XS612B1PAL5

Main

Range of product	Telemecanique Inductive proximity sensors XS
Series name	General purpose
Sensor type	Inductive proximity sensor
Device application	Mobile equipment
Sensor name	XS6
Sensor design	Cylindrical M12
Size	54 mm
Body type	Fixed
Detector flush mounting acceptance	Flush mountable
Material	Metal
Type of output signal	Discrete
Wiring technique	3-wire
[Sn] nominal sensing distance	4 mm
Discrete output function	1 NO
Output circuit type	DC
Discrete output type	PNP
Electrical connection	Cable
Cable length	5 m
[Us] rated supply voltage	12...48 V DC with reverse polarity protection
Switching capacity in mA	<= 200 mA DC with overload and short-circuit protection
IP degree of protection	IP68 double insulation conforming to IEC 60529 IP69K conforming to DIN 40050

Complementary

Thread type	M12 x 1
Detection face	Frontal
Front material	PPS
Enclosure material	Nickel plated brass
Sensing range	> 2.5...4 mm

Disclaimer: This documentation is not intended as a substitute for and is not to be used for determining suitability or reliability of these products for specific user applications

Operating zone	0…3.2 mm
Differential travel	1...15% of Sr
Cable composition	3 x 0.34 mm²
Wire insulation material	PvR
Status LED	Output state: 1 LED (yellow)
Supply voltage limits	10…58 V DC
Switching frequency	<= 2500 Hz
Maximum voltage drop	<2 V (closed)
Current consumption	<= 10 mA no-load
Maximum delay first up	10 ms
Maximum delay response	0.2 ms
Maximum delay recovery	0.2 ms
Marking	CE
Threaded length	42 mm
Length	54 mm
Net weight	0.195 kg

Environment

Product certifications	CSA UL E2
Ambient air temperature for operation	-25…70 °C
Ambient air temperature for storage	-40…85 °C
Vibration resistance	25 gn amplitude = +/- 2 mm (f = 10…55 Hz) conforming to IEC 60068-2-6
Shock resistance	50 gn for 11 ms conforming to IEC 60068-2-27

Packing Units

Unit Type of Package 1	PCE
Number of Units in Package 1	1
Package 1 Weight	158.0 g
Package 1 Height	4 cm
Package 1 width	9.5 cm
Package 1 Length	13.2 cm
Unit Type of Package 2	PAL
Number of Units in Package 2	176
Package 2 Weight	30.8 kg
Package 2 Height	60 cm
Package 2 width	80 cm
Package 2 Length	176 cm
Unit Type of Package 3	S02
Number of Units in Package 3	22
Package 3 Weight	3.963 kg
Package 3 Height	15 cm

Package 3 width	30 cm
Package 3 Length	40 cm

Offer Sustainability

Sustainable offer status	Green Premium product
REACh Regulation	REACh Declaration
EU RoHS Directive	Pro-active compliance (Product out of EU RoHS legal scope) EU RoHS Declaration
Mercury free	Yes
RoHS exemption information	Yes
Environmental Disclosure	Product Environmental Profile
Circularity Profile	End of Life Information

Contractual warranty

Warranty	18 months

Product datasheet XS612B1PAL5

Dimensions Drawings

Dimensions

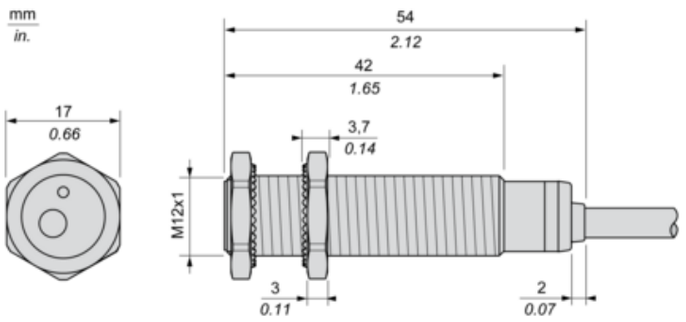

Minimum Mounting Distances

Side by side

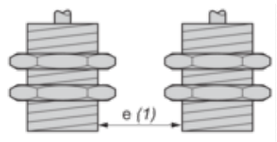

e (1) ≥ 8 mm/0.31 in.

Face to face

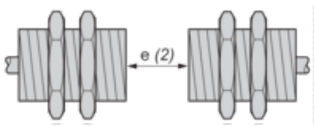

e (2) ≥ 48 mm/1.89 in.

Facing a metal object

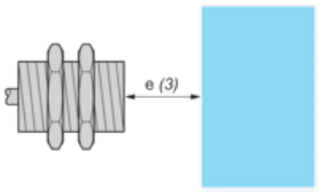

e (3) ≥ 12 mm/0.47 in.

Mounting

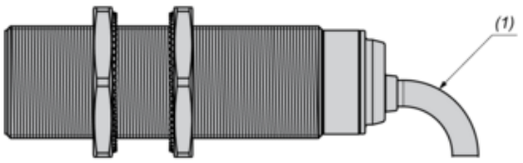

(1) Bending cable: 4 x external cable diameter

Wiring Schemes

PNP

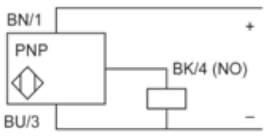

BU : Blue
BN : Brown
BK : Black