

Dimensions

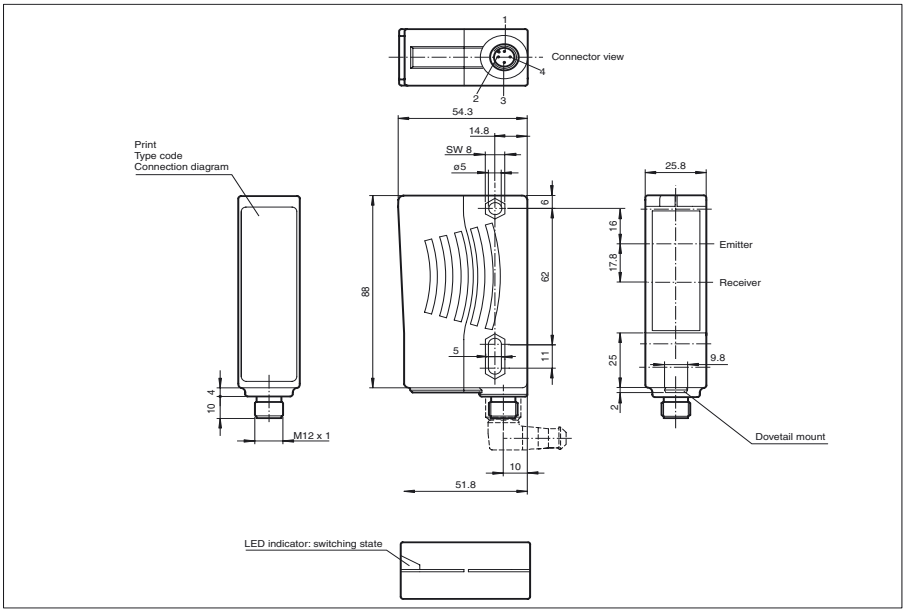

Model Number

RL29-55/73c/136

Retro-reflective sensor with polarisation filter

with 4-pin, M12 x 1 plastic connector

Features

- Very clearly visible LED
- Powerful push-pull output
- Optimal price/power ratio
- Protection class II

Accessories

OMH-05
Mounting aid

OMH-07
Mounting aid

OMH-21
Mounting aid

OMH-22
Mounting aid

OMH-MLV11-K
Mounting aid

OMH-RLK29-HW
Mounting aid

OMH-RL28-C
Mounting aid

Suitable reflectors and cable sockets can be found in the Internet

Electrical connection

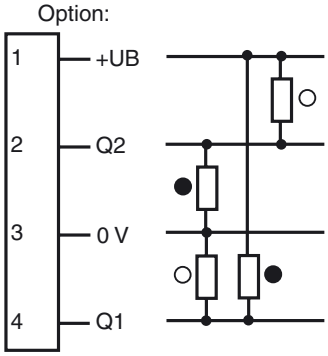

○ = Light on
● = Dark on

Pinning according

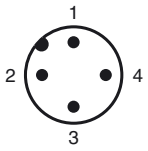

Release date: 2008-06-12 Date of issue: 2008-06-12 801762_ENG.xml

Subject to reasonable modifications due to technical advances. Copyright Pepperl+Fuchs, Printed in Germany

Technical data

General specifications		
Effective detection range		0.1 ... 7 m
Threshold detection range		10 m
Light source		LED, 660 nm
Approvals		CE, cULus
Reference target		H85 reflector
Light type		red, modulated light
Diameter of the light spot		approx. 150 mm at a distance of 7 m
Angle of divergence		Emitter: 1.2 ° , Receiver: 2 °
Ambient light limit		80000 Lux
Indicators/operating means		
Function display		LED yellow, light with free light beam , flashes when falling short of the stability control
Electrical specifications		
Operating voltage		10 ... 30 V DC
Protection class		2 , rated voltage ≤ 300 V AC with degree of pollution 1-2 according to IEC 60664-1
Ripple		10 %
No-load supply current	I_0	≤ 30 mA
Output		
Switching type		dark ON
Signal output		2 Push-pull outputs, short-circuit proof, reverse polarity protection
Switching voltage		max. 30 V DC
Switching current		max. 100 mA
Switching frequency	f	500 Hz
Response time		1 ms
Standard conformity		
Standards		EN 60947-5-2
Ambient conditions		
Ambient temperature		-25 ... 60 °C (248 ... 333 K)
Storage temperature		-40 ... 75 °C (233 ... 348 K)
Mechanical specifications		
Protection degree		IP65
Connection		Plastic connector M12 x 1, 4-pin
Material		
Housing		Plastic ABS
Optical face		plastic
Mass		70 g

Curves / Diagrams

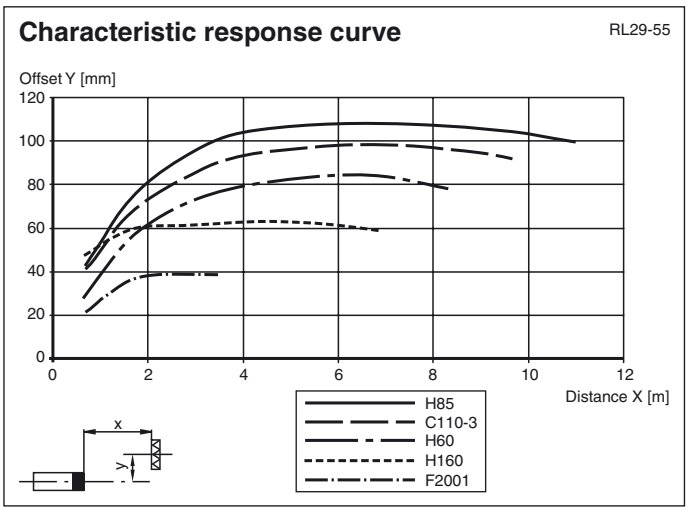

Release date: 2008-06-12 08:47 Date of issue: 2008-06-12 801762_ENG.xml

Subject to reasonable modifications due to technical advances. Copyright Pepperl+Fuchs, Printed in Germany

Relative received light strength

RL29-55

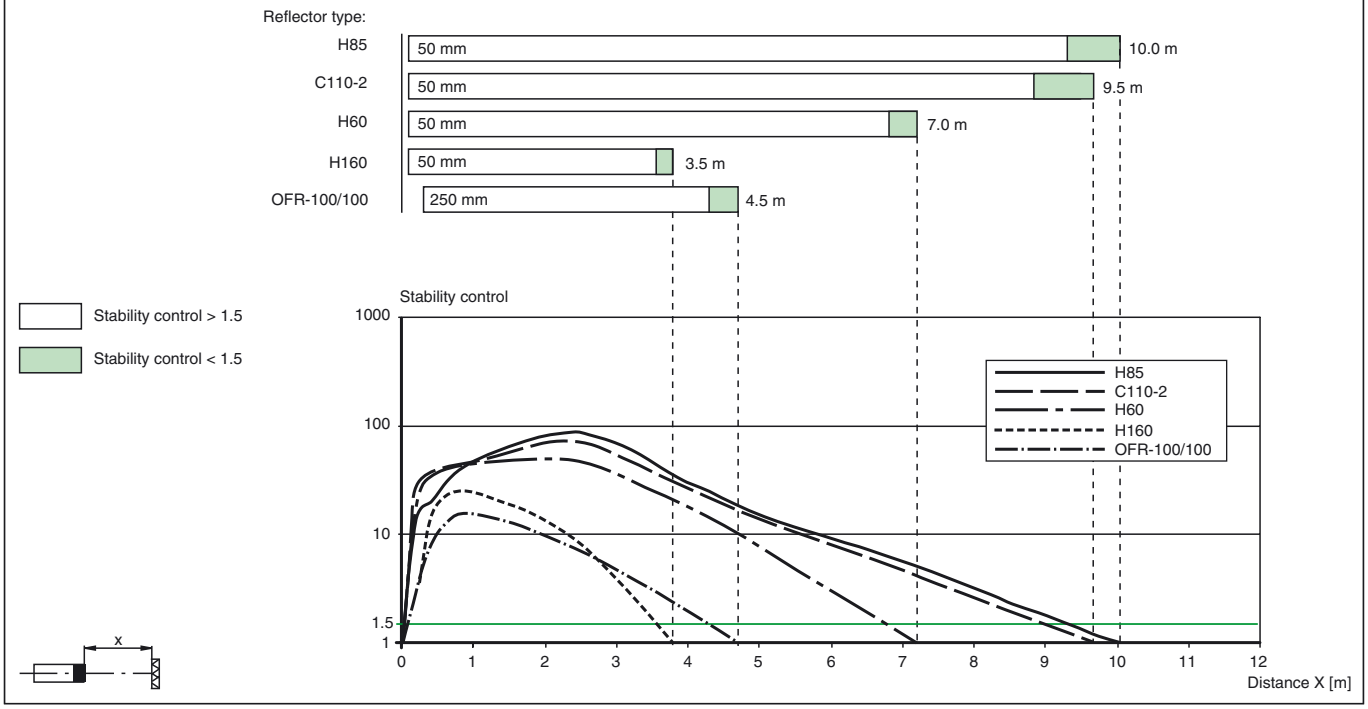

Release date: 2008-06-12 08:47 Date of issue: 2008-06-12 801762_ENG.xml

Subject to reasonable modifications due to technical advances. Copyright Pepperl+Fuchs, Printed in Germany