E20956

Reflector for retro-reflective sensors

REFLECTOR TS-50

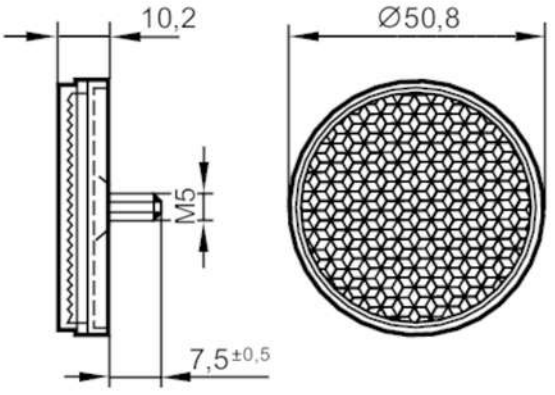

Application		
Design		round, for red light and infrared light retro-reflective sensors
Operating conditions		
Ambient temperature	[°C]	-10...60
Mechanical data		
Weight	[g]	15.7
Dimensions	[mm]	Ø 50.8 / L = 10.2
Reflector surface	[mm]	Ø 48
Materials		plastics
Remarks		
Pack quantity		1 pcs.