U.306N - Inside pullers



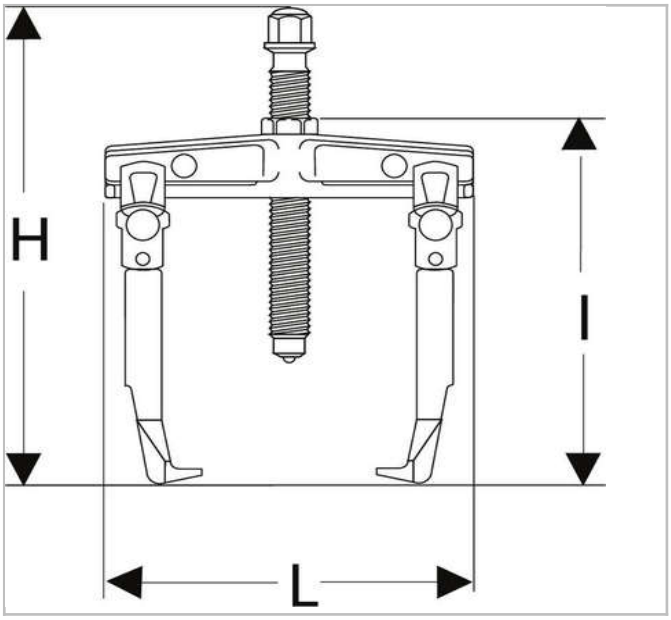

Description:

● Versatile: takes 2 or 3 legs. Converts into outside puller with the legs U.306G1 + screw U.306-4 or legs U.306G10 + screw U.306-2 or legs U.306G15 + screw U.306-3 (supplied fitted with its extension).
● Comfort: self-gripping legs by return spring. The puller stays in rolling position even when not in tension.
● Safety: legs locked in position on the bearing using a knob. No risk for the puller to escape from the bearing.
● Shear pin: the pin shears if torque limit is exceeded. Supplied with 2 spare pins.
● Set of 3 spare pins. Refer to spares table according to puller power.
● Adaptable puller accessories: slide hammer U.306M (direct attachment) and beam U.40 (attached using ring and nut U.306A1 to be ordered separately).

© FACOM 2020

	Depth Maxi [mm]	Length L [mm]	Height H [mm]	C Mini - Maxi [mm]	Length [mm]	Hex Size [mm]	Screw Size ["]	t ["]	Weight [Kg]	Legs_Multi ["]	Screw Size Multi ["]	Tonnes ["]
U.306-170N	190.0	135.0	320.0	50 - 170	285.0	18.0	U.306-2	40.0	1.8	U.306G20	18.0	4.0
U.306A130N	140.0	130.0	250.0	23 - 130	225.0	18.0	U.306-4	30.0	1.3	U.306G2	18.0	3.0

© FACOM 2020