Lovato electric
ENERGY AND AUTOMATION

P1MS4P040

Modular switch disconnector - 4P 40A



Product designation			Switch disconnector
Product type designation			P1MS
Number of poles			4P
Number of DIN modules			4
Compliance			IEC
Electrical features			
Rated insulation voltage Ui IEC/EN		V	1000
Rated impulse withstand voltage Uimp		kV	4
Rated operational voltage AC (IEC)		VAC	400…440
Rated frequency		Hz	50/60
Rated current (In)		A	40
Ambient conditions			
Operating temperature			
	min	°C	-25
	max	°C	+70
Storage temperature			
	min	°C	-25
	max	°C	+70
Max altitude		m	2000
Mechanical features			
Operating position			
	normal		Vertical plan
Fixing			35mm DIN rail
Tightening torque for terminals			
	min	Nm	3.2
	max	Nm	3.5
	min	lbin	28.3
	max	lbin	31
Terminals tool			Pz2
Conductor section			
IEC			
	min	mm²	1
	max	mm²	50
AWG/Kcmil			
	min		16
	max		1
Mechanical life		cycles	20000
Weight		g	330
Pollution degree			3
Dimensions			

The characteristics described in this document are subject to updates or modifications at any time. The descriptions, technical and functional information, illustrations and instructions in this brochure are purely illustrative, and are consequently not contractually binding

P1MS4P040

Modular switch disconnector - 4P 40A

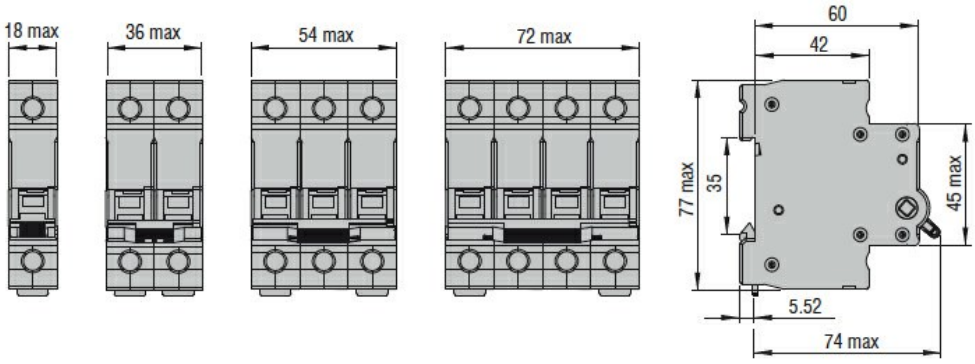

Wiring diagrams

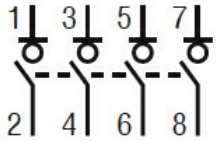

Certifications and compliance

Compliance

IEC/EN/BS 60947-3.

Certifications

EAC

TÜV-Rheinland

ETIM classification

ETIM 8.0

EC000042 - Miniature circuit breaker (MCB)

The characteristics described in this document are subject to updates or modifications at any time. The descriptions, technical and functional information, illustrations and instructions in this brochure are purely illustrative, and are consequently not contractually binding