Part Number: BU-00245-*
Description: Set Screw Banana Plug
2907

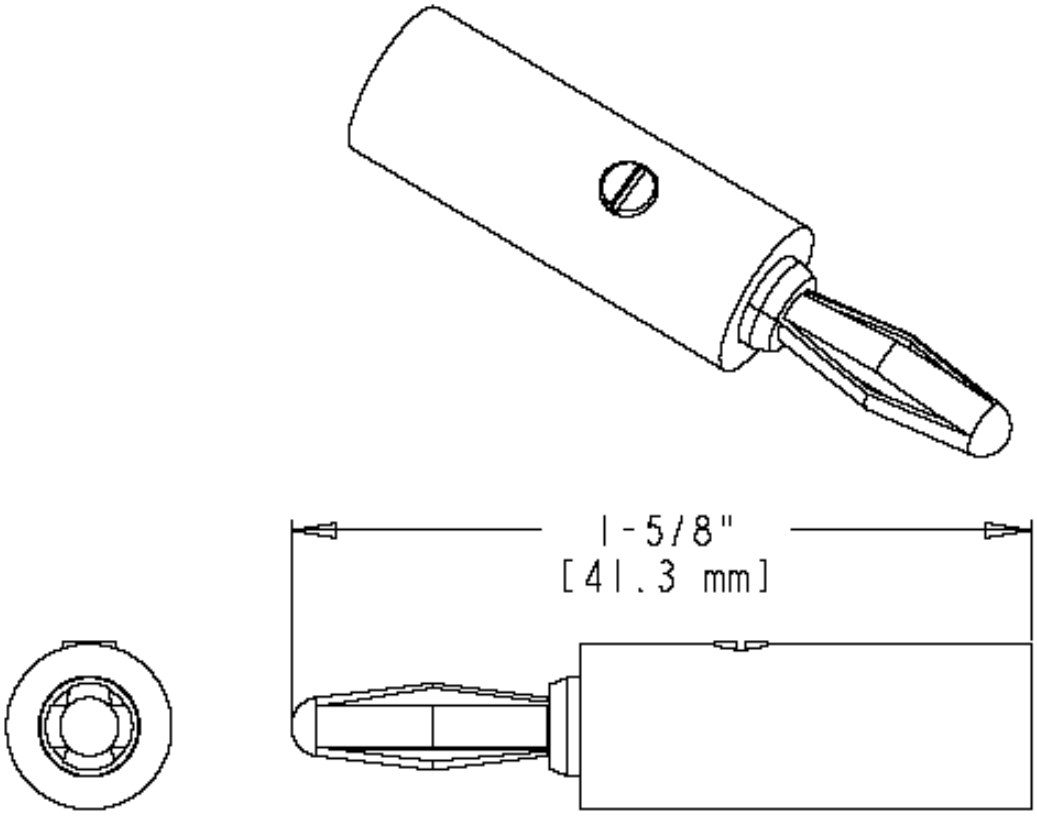

- Set Screw Banana Plug
- Material: Banana Plug: nickel-plated brass body; Spring: nickel-plated phosphor bronze; Insulator: ABS
- Length: 1.62” (41.3mm)
- *Std. Colors: -0 Black -2 Red
- Rating: 15 Amps

Mueller Electric Company
1625 E. 31st Street
Cleveland, Ohio 44114
ISO 9001:2000
Over 95 Years Of Innovation
www.muellerelectric.com
TEL. 800-955-2629
TEL. 216-771-5225
FAX. 216-771-3068