HENGSTLER

TECHNICAL DATASHEET

Incremental Encoder RI 36-O

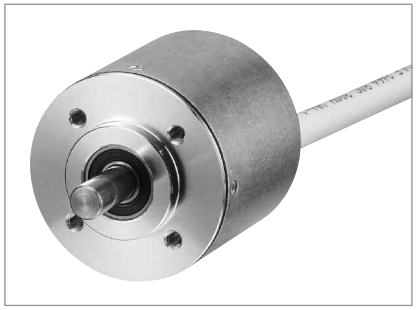

- Miniature industry standard encoder for high numbers of pulses
- High reliability
- Applications: CNC axles, machine tools, robots, special purpose machines, high-speed winding machines

NUMBER OF PULSES

5 / 10 / 20 / 25 / 28 / 32 / 50 / 60 / 72 / 100 / 128 / 144 / 200 / 250 / 256 / 288 / 300 / 360 / 400 / 500 / 512 / 600 / 720 / 900 / 1000 / 1024 / 1250 / 1500 / 2000 / 2048 / 2500 / 3000 / 3600
Other number of pulses on request

TECHNICAL DATA
mechanical

Housing diameter	36 mm
Shaft diameter	6 mm / 6.35 mm (Solid shaft)
Flange (Mounting of housing)	Synchro flange, Pilot flange
Protection class shaft input (EN 60529)	IP64
Protection class housing (EN 60529)	IP64
Shaft load axial / radial	5 N / 10 N
Max. speed	max. 10 000 rpm
Torque	≤ 0.3 Ncm
Moment of inertia	approx. 2.8 gcm²
Vibration resistance (DIN EN 60068-2-6)	100 m/s² (10 ... 2000 Hz)
Shock resistance (DIN EN 60068-2-27)	1000 m/s² (6 ms)
Operating temperature	-10 °C ... +70 °C
Storage temperature	-25 °C ... +85 °C
Material housing	Aluminum
Weight	approx. 80 g
Connection	Cable, axial or radial M16 (Binder), axial or radial

TECHNICAL DATA
electrical

General design	as per DIN VDE 0160, protection class III, contamination level 2, overvoltage class II
Supply voltage [1]	RS422 + Alarm (R), RS422 + Sense (T): DC 5 V ±10 % Push-pull (K), Push-pull antivalent (I): DC 10-30 V
Max. current w/o load	40 mA (DC 5 V), 60 mA (DC 10 V), 30 mA (DC 24 V)
Max. pulse frequency	RS422: 300 kHz Push-pull: 200 kHz
Standard output versions	RS422 + Sense (T): A, B, N, $\overline{A}$, $\overline{B}$, $\overline{N}$, Sense RS422 + Alarm (R): A, B, N, $\overline{A}$, $\overline{B}$, $\overline{N}$, $\overline{Alarm}$ Push-pull (K): A, B, N, $\overline{Alarm}$ Push-pull complementary (I): A, B, N, $\overline{A}$, $\overline{B}$, $\overline{N}$, $\overline{Alarm}$
Pulse width error	± max. 25° electrical
Number of pulses	5 ... 3600

Specifications subject to change without notice.

TECHNICAL DATASHEET

Incremental Encoder RI 36-O

TECHNICAL DATA
electrical (continued)

Alarm output	NPN-O.C., max. 5 mA
Pulse shape	Square wave
Pulse duty factor	1:1

[1] With push-pull (K) and push-pull complementary (I): pole protection

ELECTRICAL CONNECTIONS
Cable PVC

Cable PVC (A, B)		**Output**		
Colour	**Lead mm** [2]	**RS422 (R, T)**	**push-pull (K)**	**push-pull complementary (I)**
red	0.5	DC 5 V	DC 10 - 30 V	DC 10 - 30 V
yellow/red	0.14	Sense V_{CC}		Sense V_{CC}
white	0.14	Channel A	Channel A	Channel A
white/brown	0.14	Channel $\overline{A}$		Channel $\overline{A}$
green	0.14	Channel B	Channel B	Channel B
green/brown	0.14	Channel $\overline{B}$		Channel $\overline{B}$
yellow	0.14	Channel N	Channel N	Channel N
yellow/brown	0.14	Channel $\overline{N}$		Channel $\overline{N}$
black	0.5	GND	GND	GND
yellow/black	0.14	$\overline{Alarm}$/Sense GND [1]	$\overline{Alarm}$	$\overline{Alarm}$
screen [2]		screen [2]	screen [2]	screen [2]

[1] depending on ordering code

[2] connected with encoder housing

ELECTRICAL CONNECTIONS
M16 connector (Binder), 6 pole

Description (push-pull)	**Pin**
DC 10 - 30 V	1
Channel A	2
Channel N	3
Channel B	4
$\overline{Alarm}$	5
GND	6

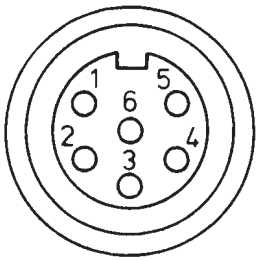

Specifications subject to change without notice.

TECHNICAL DATASHEET

Incremental Encoder RI 36-O

DIMENSIONED DRAWINGS

Synchro flange

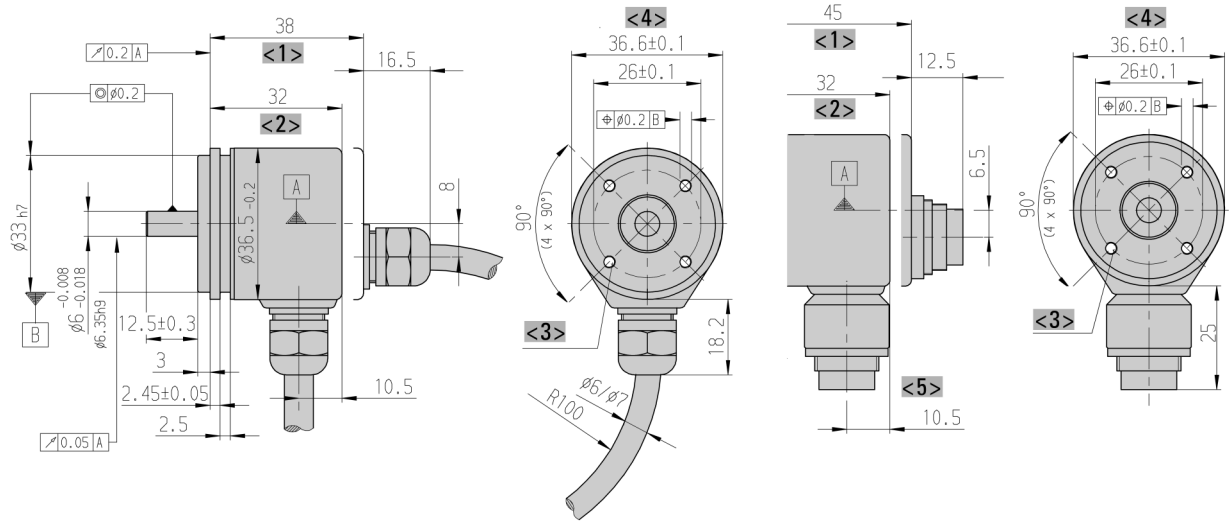

<1> axial
<2> radial
<3> mounting thread M3x5
<4> Housing
<5> 6 pole (pins)

Cable bending radius R for flexible installation ≥ 100 mm
Cable bending radius R for fixed installation ≥ 40 mm

Dimensions in mm

Pilot flange

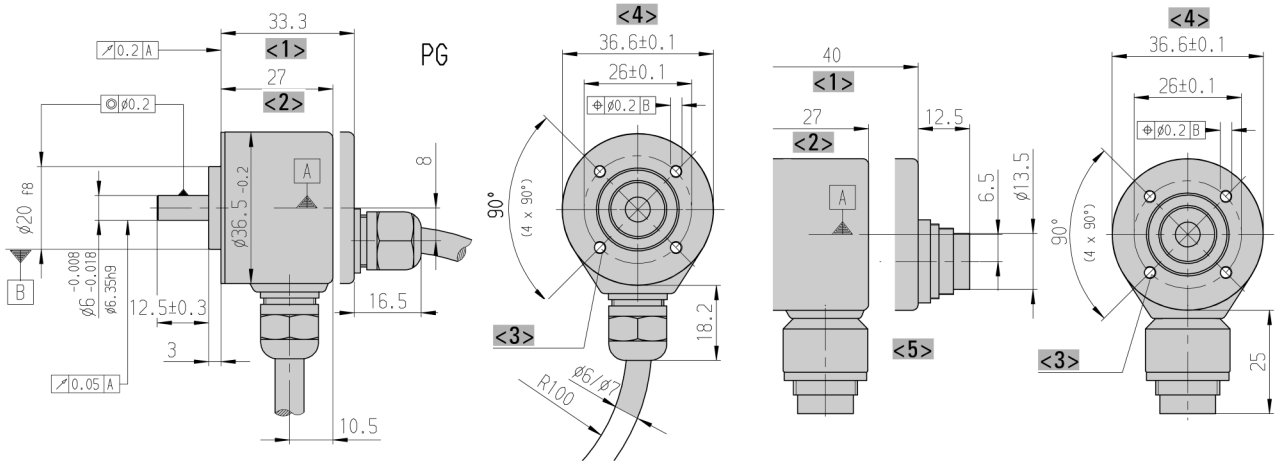

<1> axial
<2> radial
<3> mounting thread M3x5
<4> Housing
<5> 6 pole (pins)

Cable bending radius R for flexible installation ≥ 100 mm
Cable bending radius R for fixed installation ≥ 40 mm

Dimensions in mm

Specifications subject to change without notice.

TECHNICAL DATASHEET

Incremental Encoder RI 36-O

ORDERING INFORMATION

Type	Number of pulses	Supply voltage [1]	Flange, Protection, Shaft	Output [2]	Connection [3]
☐	☐	☐	☐	☐	☐
RI36-O	**5 ... 3600**	**A** DC 5 V **E** DC 10 - 30 V	**S.31** Synchro, IP64, 6 mm **R.31** Pilot, IP64, 6 mm **R.35** Pilot, IP64, 6,35 mm	**R** RS422 +Alarm **T** RS422 +Sense **K** Push-pull **I** Push-pull com-plementary	**A** Cable, axial **B** Cable, radial **E-I** M23 connector (Conin) at 1 m TPE cable, cw **E-D** M23 connector (Conin) at 1 m TPE cable, ccw **J** M16 connector (Binder), 6 pole, radial **N** M16 connector (Binder), 6 pole, axial

[1] DC 10 - 30 V only with output push-pull (K) and push-pull complementary (I)
[2] Output code "K" and "I": short-circuit-proof
[3] For Output Code "N" und "J" (M16): only push-pull

ORDERING INFORMATION
Selection of cable length

Versions with cable outlet (connection A, B, E or F) are available with various lengths of cable. To order your desired cable length, please add the respective code to the end of your ordering code. Further cable lengths on request.

Code	Cable length
without code	1.5 m
-D0	3 m
-F0	5 m
-K0	10 m
-P0	15 m
-U0	20 m
-V0	25 m

Specifications subject to change without notice.

TECHNICAL DATASHEET

Incremental Encoder RI 36-O
Accessories

FLEXIBLE COUPLINGS



Helical coupling



Isolated disk coupling

		Ordering code
Helical coupling 19/28	5 mm / 6 mm	3 520 035
Helical coupling 19/28	6 mm / 6.35 mm	3 520 051
Helical coupling 19/28	6.35 mm / 6.35 mm	3 520 057
Helical coupling 25/32	6 mm / 9.53 mm	3 520 052
Helical coupling 25/32	6 mm / 10 mm	3 520 066
Helical coupling 25/32	6.35 mm / 9.52 mm	3 520 062
Isolated disk coupling	6 mm / 6 mm	3 520 081
Isolated disk coupling	6.35 mm / 6.35 mm	3 520 085

MOUNTING

	Ordering code
Clamping eccentric for synchro flange, for M2,5 (set of three)	0 070 654

CONNECTORS

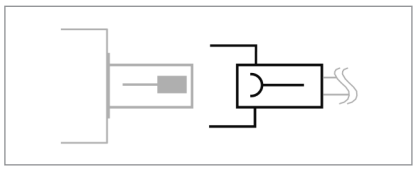

Connector (socket) matching with encoder connector	Ordering code
M16 (Binder), 6 pole, bent, IP40, mating connector for connection J/N	3 539 209
M16 (Binder), 6 pole, gerade, IP67, mating connector for connection J/N	3 539 472
M23 (Conin), 12 pole, PG9, cw, mating connector for connection C/D/-I	3 539 202

CONNECTORS

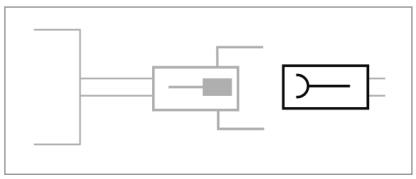

Coupling (socket) matching with encoder cable with connector	Ordering code
M23 (Conin), 12 pole, cw, mating connector for connection -C (cable plug 3 539 186)	3 539 187

CONNECTORS

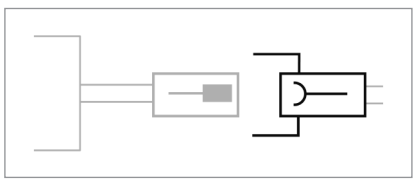

Connector (socket) matching with encoder cable with connector	Ordering code
M23 (Conin), 12 pole, ccw, mating connector for connection G/H/-D/-H	3 539 229

CONNECTING CABLES

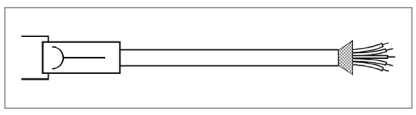

Connecting cables with plug (socket) on one end	Ordering code
M16 (Binder), 6 pole, PVC cable, mating connector for connection J/N, 3 m	1 522 405
M16 (Binder), 6 pole, PVC cable, mating connector for connection J/N, 5 m	1 522 404

Specifications subject to change without notice.

TECHNICAL DATASHEET

Incremental Encoder RI 36-O
Accessories

CONNECTING CABLES (continued)

Connecting cables with plug (socket) on one end	Ordering code
M16 (Binder), 6 pole, PVC cable, mating connector for connection J/N, 10 m	1 522 340
M16 (Binder), 6 pole, PVC cable, mating connector for connection J/N, 15 m	1 522 833
M16 (Binder), 6 pole, PVC cable, mating connector for connection J/N, 50 m	1 522 836
M23 (Conin), 12 pole, TPE cable, cw, mating connector for connection C/D/-I, 3 m	1 522 348
M23 (Conin), 12 pole, TPE cable, cw, mating connector for connection C/D/-I, 5 m	1 522 349
M23 (Conin), 12 pole, TPE cable, cw, mating connector for connection C/D/-I, 10 m	1 522 350
M23 (Conin), 12 pole, TPE cable, cw, mating connector for connection C/D/-I, 15 m	1 522 454
M23 (Conin), 12 pole, TPE cable, cw, mating connector for connection C/D/-I, 20 m	1 522 456
M23 (Conin), 12 pole, TPE cable, cw, mating connector for connection C/D/-I, 25 m	1 522 457
M23 (Conin), 12 pole, TPE cable, cw, mating connector for connection C/D/-I, 30 m	1 522 464
M23 (Conin), 12 pole, TPE cable, cw, mating connector for connection C/D/-I, 40 m	1 522 643
M23 (Conin), 12 pole, TPE cable, cw, mating connector for connection C/D/-I, 50 m	1 522 793
M23 (Conin), 12 pole, TPE cable, ccw, mating connector for connection G/H/-D/-H, 3 m	1 522 394
M23 (Conin), 12 pole, TPE cable, ccw, mating connector for connection G/H/-D/-H, 5 m	1 522 395
M23 (Conin), 12 pole, TPE cable, ccw, mating connector for connection G/H/-D/-H, 10 m	1 522 396
M23 (Conin), 12 pole, TPE cable, ccw, mating connector for connection G/H/-D/-H, 15 m	1 522 447
M23 (Conin), 12 pole, TPE cable, ccw, mating connector for connection G/H/-D/-H, 20 m	1 522 461
M23 (Conin), 12 pole, TPE cable, ccw, mating connector for connection G/H/-D/-H, 25 m	1 522 462
M23 (Conin), 12 pole, TPE cable, ccw, mating connector for connection G/H/-D/-H, 30 m	1 522 463
M23 (Conin), 12 pole, TPE cable, ccw, mating connector for connection G/H/-D/-H, 40 m	1 522 463

CONNECTING CABLES

Cable not made up with connectors	Ordering code
PVC cable, 10-core + screen	3 280 114 + length
PVC cable, 6-core + screen	3 280 113 + length
TPE cable, 12-core + screen	3 280 112 + length

Specifications subject to change without notice.

TECHNICAL DATASHEET

Incremental Encoder RI 36-O
Accessories

MEASURING WHEELS

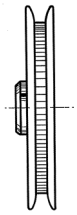
Tread 1

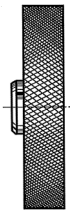
Tread 2 + 3

Tread 1
with rim and fine crosshatched knurl
Applications such as threads and yarns

Tread 2 B
with glued-on rubber profile B = low-wear rubber surface with good grip (white)
Applications such as paper and cardboard, measuring cables, nongreasy metals, fleece, undressed or surface-treated wood, soft and hard plastics

Material	Bore diameter (mm) fitting to encoder shaft	Circumference	Tread	Width of bearing surface	**Ordering code**
Aluminum	6 mm	0.2 m	1	4 mm	0 601 015
Aluminum	6 mm	0.2 m	2 B	12 mm	0 601 048

Specifications subject to change without notice.