Assisting the automation industry since 1986

User manual
COUNTER
SLIK-N118

- Firmware: v.8.10 or higher
- Input type: pulse, quadrature
- Batching function, wall mounting case IP 67



Read the user's manual carefully before starting to use the unit or software.
Producer reserves the right to implement changes without prior notice.

CONTENTS

1. BASIC REQUIREMENTS AND USER SAFETY....3
2. GENERAL CHARACTERISTICS....4
3. TECHNICAL DATA....4
4. DEVICE INSTALLATION....6
4.1. UNPACKING....6
4.2. ASSEMBLY....7
4.3. CONNECTION METHOD....7
4.4. MAINTENANCE....13
5. FRONT PANEL DESCRIPTION....13
6. PRINCIPLE OF OPERATION....14
6.1. MEASUREMENT MODE....14
6.2. BATCHER FUNCTION....16
6.3. AUTOPRESCALER....18
6.4. THE DIGITAL FILTER....18
6.5. CONTROL OF THE RELAY OUTPUTS....20
7. DEVICE PROGRAMMING....22
7.1. PROGRAMMING MENU....22
7.2. PARAMETERS EDITION....23
7.2.1. Numeric parameters (digit change mode)....23
7.2.2. Numeric parameters (slide change mode)....23
7.2.3. Switch parameters (“LIST” type)....23
7.3. MENU DESCRIPTION....24
7.3.1. “rELAy” menu....24
7.3.2. “Funct” parameter....25
7.3.3. “Pr inP” parameter....26
7.3.4. “rESEt” parameter....26
7.3.5. “ArESEt” parameter....26
7.3.6. “FiLtEr” parameter....27
7.3.7. “PArUPd” parameter....27
7.3.8. ”PrESCA” menu....27
7.3.9. ”rS-485” menu....28
7.3.10. ”SECu” menu....29
7.3.11. ”briGHt” parameter....31
7.3.12. ”Edit” parameter....31
7.3.13. ”dEFS” parameter....31
7.4. MENU STRUCTURE....32
8. EXAMPLES OF PRESCALER PARAMETERS CALCULATION....34
9. THE MODBUS PROTOCOL HANDLING....35
9.1. LIST OF REGISTERS....35
9.2. TRANSMISSION ERRORS DESCRIPTION....38
9.3. EXAMPLES OF QUERY/ANSWER FRAMES....38
10. DEFAULT AND USER'S SETTINGS LIST....41

Explanation of symbols used in the manual:

- This symbol denotes especially important guidelines concerning the installation and operation of the device. Not complying with the guidelines denoted by this symbol may cause an accident, damage or equipment destruction.

IF THE DEVICE IS NOT USED ACCORDING TO THE MANUAL THE USER IS RESPONSIBLE FOR POSSIBLE DAMAGES.

- This symbol denotes especially important characteristics of the unit. Read any information regarding this symbol carefully

1. BASIC REQUIREMENTS AND USER SAFETY

- **The manufacturer is not responsible for any damages caused by inappropriate installation, not maintaining the proper environmental conditions and using the unit contrary to its assignment.**
- Installation should be conducted by qualified personnel . During installation all available safety requirements should be considered. The fitter is responsible for executing the installation according to this manual, local safety and EMC regulations.
- GND input of device should be connected to PE wire;
- The unit must be properly set-up, according to the application. Incorrect configuration can cause defective operation, which can lead to unit damage or an accident.
- **If in the case of a unit malfunction there is a risk of a serious threat to the safety of people or property additional, independent systems and solutions to prevent such a threat must be used.**
- **The unit uses dangerous voltage that can cause a lethal accident. The unit must be switched off and disconnected from the power supply prior to starting installation of troubleshooting (in the case of malfunction).**
- Neighbouring and connected equipment must meet the appropriate standards and regulations concerning safety and be equipped with adequate overvoltage and interference filters.
- **Do not attempt to disassemble, repair or modify the unit yourself. The unit has no user serviceable parts. Defective units must be disconnected and submitted for repairs at an authorized service centre.**

- Do not use the unit in areas threatened with excessive shocks, vibrations, dust, humidity, corrosive gasses and oils.
- Do not use the unit in areas where there is risk of explosions.

- Do not use the unit in areas with significant temperature variations, exposure to condensation or ice.
- Do not use the unit in areas exposed to direct sunlight.
- Make sure that the ambient temperature (e.g. inside the control box) does not exceed the recommended values. In such cases forced cooling of the unit must be considered (e.g. by using a ventilator).

The unit is designed for operation in an industrial environment and must not be used in a household environment or similar.

2. GENERAL CHARACTERISTICS

Universal programmable counter type **SLIK-N118** is equipped with many modern features required in simple and advanced automatic control systems. The counter had been designed for hard environment conditions, and increased usefulness.

The unit is assembled in panel mounted case with programming keyboard on front panel, and terminals on back panel. User can use local keyboard to set all necessary parameters due to his own requirements. Build in RS-485 communication interface enables controlling of all settings by host, and allows use of unit in advanced network systems.

Two counting inputs (pulse inputs) can operate in few different modes (as two independent pulse inputs or single quadrature input). Additional programmable input can change basic function of counting inputs (addition or subtraction of pulses from inputs, change the direction of counting) or to stop counting without clearing.

Counter type **SLIK-N118** is equipped with independent clearing input. The device can be equipped with two relay (or OC type) outputs with independent threshold, which can be used to control external devices. The counters **SLIK-N118** are designed for cooperation with electronic (PNP and NPN) detectors, and mechanical detectors – switches (build in digital filter allows connectors denouncing). All inputs are separated from ground of counter, and power supply. The meter can be ordered in three power supply versions.

The device has 5 buttons being used for main presets programming. To get high protection level, the keyboard is mounted under transparent cover. To allow user to change presets without opening the cover, an IR sensor is mounted. Remote controller keyboard is equivalent to the device keyboard (Note, that remote controller is not a part of the **SLIK-N118** set – it is an additional equipment).

3. TECHNICAL DATA

Power supply voltage (depending on version)	85...**230**...260V AC/DC; 50 ÷ 60 Hz (separated) or 19...**24**...50V DC and 16...**24**...35V AC (separated)
External fuse (required)	T - type, max. 2 A
Power consumption	max. 4.5 VA @ 85 ÷ 260V AC/DC max. 4.5 VA @ 16V ÷ 35V AC max. 4.5 W @ 19V ÷ 50V DC

Pulse inputs	
A and B inputs	counting (terminal no. 9,10)
C input	programmable (terminal no. 11)
D input	reset counter (terminal no. 12)
COM	common terminal (terminal no. 13)
Input levels	
low level:	0V ÷ 1V
high level:	10V ÷ 30V
Max. input frequency	electronic - standard counter: 10 kHz electronic - quadrature counter: 5 kHz contact: 90 Hz (adjustable filter)
Display range	-99999 ÷ 999999, plus decimal point
Outputs	
relay:	0 or 2 NO, 1A/250V AC (cos φ = 1)
OC-type:	0 or 2 30mA / 30VDC / 100mW
sensor power supply U_O:	24V +5%, -10% / max. 100 mA, stabilized
Communication interface	RS 485, 8N1 and 8N2, Modbus RTU, not separated
Baud rate	1200 bit/s ÷ 115200 bit/s
Display	LED, 6 digit, 13mm height, red
Data memory	non-volatile memory, EEPROM type
Protection level	IP 67
Housing type	wall mounted
Housing material	ABS + fibreglass
Housing dimensions	
without glands:	110 x 80 x 67 mm
with glands:	110 x 105 x 67 mm
Operating temperature (depending on version)	0°C to +50°C or -20°C to +50°C
Storage temperature (depending on version)	-10°C to +70°C or -20°C to +70°C
Humidity	5 to 90% no condensation
Altitude	up to 2000 meters above sea level
Screws tightening max. torque	0,5 Nm
Max. connection leads diameter	3 mm^2 (for connectors 1÷6) or 2 mm^2 (for connectors 7÷16)
Safety requirements	according to: PN-EN 61010-1 installation category: II pollution degree: 2 voltage in relation to ground: 300V AC

	insulation resistance: >20MΩ insulation strength between power supply and input/output terminal: 1min. @ 2300V insulation strength between relays terminal: 1min. @ 1350V
EMC	according to: PN-EN 61326-1



This is a class A unit. In housing or a similar area it can cause radio frequency interference. In such cases the user can be requested to use appropriate preventive measures.

4. DEVICE INSTALLATION

The unit has been designed and manufactured in a way assuring a high level of user safety and resistance to interference occurring in a typical industrial environment. In order to take full advantage of these characteristics installation of the unit must be conducted correctly and according to the local regulations.



- Read the basic safety requirements on page 3 prior to starting the installation.
- Ensure that the power supply network voltage corresponds to the nominal voltage stated on the unit's identification label.
- The load must correspond to the requirements listed in the technical data.
- All installation works must be conducted with a disconnected power supply.
- Protecting the power supply clamps against unauthorized persons must be taken into consideration.

4.1. UNPACKING

After removing the unit from the protective packaging, check for transportation damage. Any transportation damage must be immediately reported to the carrier. Also, write down the unit serial number on the housing and report the damage to the manufacturer.

Attached with the unit please find:
- user's manual,
- warranty,

4.2. ASSEMBLY

- Disconnect the power supply prior to starting assembly.
- Check the connections are wired correctly prior to switching the unit on.

To install device on the wall, a pinholes should be made. Figure 4.1 presents dimensions of the device and distances between holes. The back side of the device has four mounting holes. This part of the case should be mounted to a wall by screws.

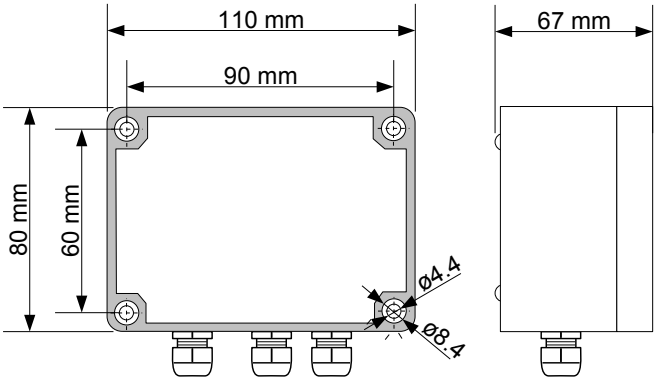

Figure 4.1. Device and assembly dimensions

4.3. CONNECTION METHOD

Caution

- Installation should be conducted by qualified personnel . During installation all available safety requirements should be considered. The fitter is responsible for executing the installation according to this manual, local safety and EMC regulations.
- The unit is not equipped with an internal fuse or power supply circuit breaker. Because of this an external time-delay cut-out fuse with minimal possible nominal current value must be used (recommended bipolar, max. 2A) and a power supply circuit-breaker located near the unit. In the case of using a monopolar fuse it must be mounted on the phase cable (L).
- The power supply network cable diameter must be selected in such a way that in the case of a short circuit of the cable from the side of the unit the cable shall be protected against destruction with an electrical installation fuse.
- Wiring must meet appropriate standards and local regulations and laws.



- In order to secure against accidental short circuit the connection cables must be terminated with appropriate insulated cable tips.

- Tighten the clamping screws. The recommended tightening torque is 0.5 Nm. Loose screws can cause fire or defective operation. Over tightening can lead to damaging the connections inside the units and breaking the thread.

- In the case of the unit being fitted with separable clamps they should be inserted into appropriate connectors in the unit, even if they are not used for any connections.

- Unused clamps (marked as n.c.) must not be used for connecting any connecting cables (e.g. as bridges), because this can cause damage to the equipment or electric shock.

- If the unit is equipped with housing, covers and sealing packing, protecting against water intrusion, pay special attention to their correct tightening or clamping. In the case of any doubt consider using additional preventive measures (covers, roofing, seals, etc.). Carelessly executed assembly can increase the risk of electric shock.

- After the installation is completed do not touch the unit's connections when it is switched on, because it carries the risk of electrical shock.

Due to possible significant interference in industrial installations appropriate measures assuring correct operation of the unit must be applied. To avoid the unit of improper indications keep recommendations listed below.

– Avoid common (parallel) leading of signal cables and transmission cables together with power supply cables and cables controlling induction loads (e.g. contactors). Such cables should cross at a right angle.

– Contactor coils and induction loads should be equipped with anti-interference protection systems, e.g. RC-type.

– Use of screened signal cables is recommended. Signal cable screens should be connected to the earthing only at one of the ends of the screened cable.

– In the case of magnetically induced interference the use of twisted couples of signal cables (so-called "spirals") is recommended. The spiral (best if shielded) must be used with RS-485 serial transmission connections.

– In the case of measurement or control signals are longer than 30m or go outside of the building then additional safety circuits are required.

– In the case of interference from the power supply side the use of appropriate anti-interference filters is recommended. Bear in mind that the connection between the filter and the unit should be as short as possible and the metal housing of the filter must be connected to the earthing with largest possible surface. The cables connected to the filter output must not run in parallel with cables with interference (e.g. circuits controlling relays or contactors).

Connection of the power supply, and the measurement and controlling signals should be made by clamping connectors mounted inside the housing.

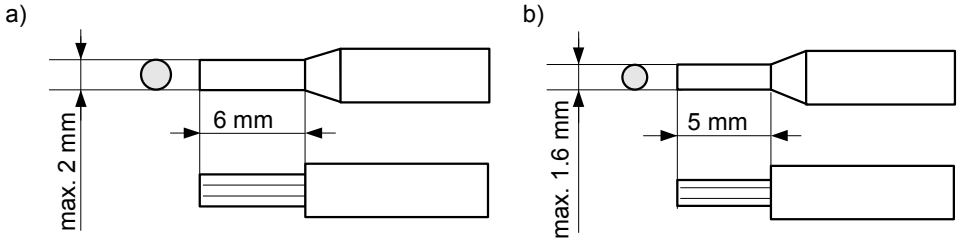

Figure 4.2. Recommended dimensions of cable stripping
***a)** for big connectors (1 to 6), **b)** for small connectors (7 to 16)*

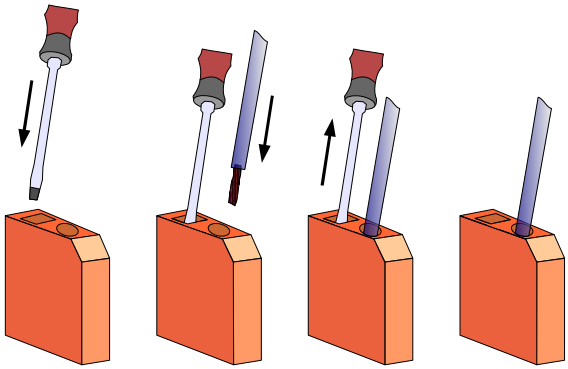

Figure 4.3. Method of connecting cables to the clamping *connectors*

All connections must be made while power supply is disconnected !

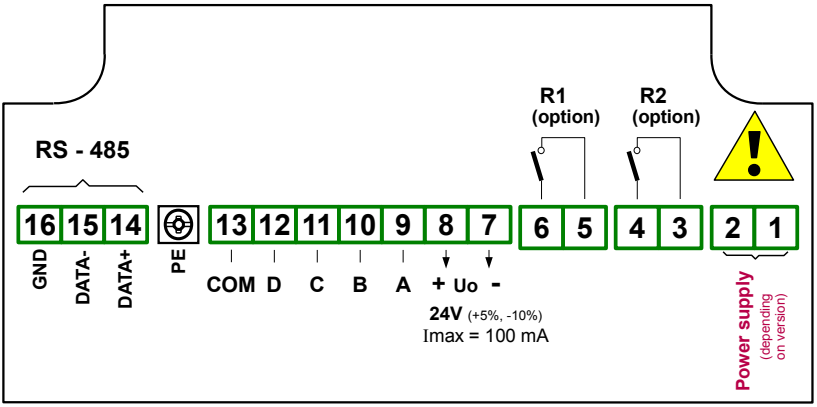

Figure 4.4. Terminals description (relay outputs)

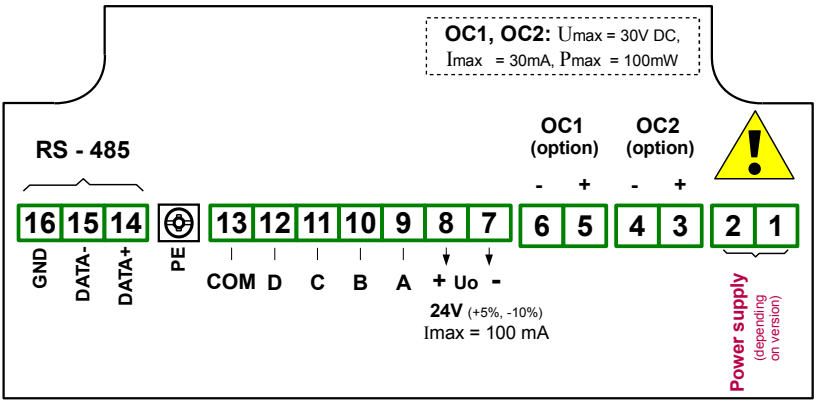

Figure 4.5. Terminals description (OC-type outputs)

Description of control signals' symbols.

{ A },{ B } - counting input, pulse;
{ C } - programmable input;
{ D } - reset counter input;
{ COM } - common terminal

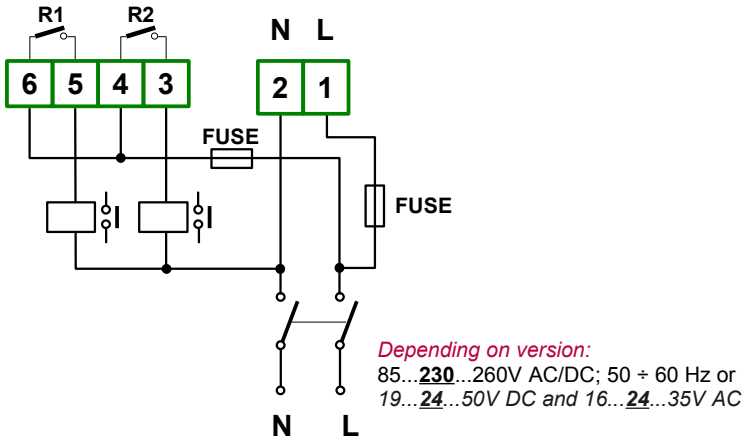

Figure 4.6. Connection of power supply and relays

Contacts of relay outputs are not equipped with spark suppressors. While use the relay outputs for switching of inductive loads (coils, contactors, power relays, electromagnets, motors etc.) it is required to use additional suppression circuit (typically capacitor 47nF/ min. 250VAC in series with 100R/5W resistor), connected in parallel to relay terminals or (better) directly on the load. In consequence of using the suppression circuit, the level of generated electromagnetic disturbances is lower, and the life of relay contacts rises.

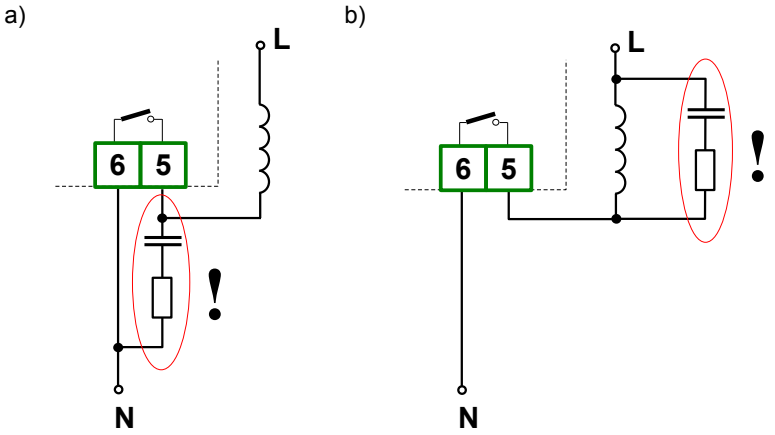

Figure 4.7. Examples of suppression circuit connection:
a) to relay terminals; b) to the inductive load

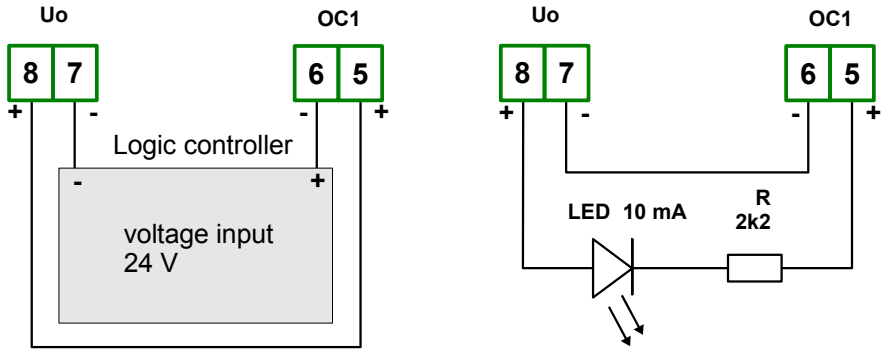

Figure 4.8. Example of OC-type outputs connection

Construction of counter's inputs allows connecting of pulser with common earth (Figure 4.9 a) or common plus (Figure 4.9 b), without additional intermediary circuits (sensor with NPN or PNP type output); for outputs of push-pull type kind of connection it has no matter.

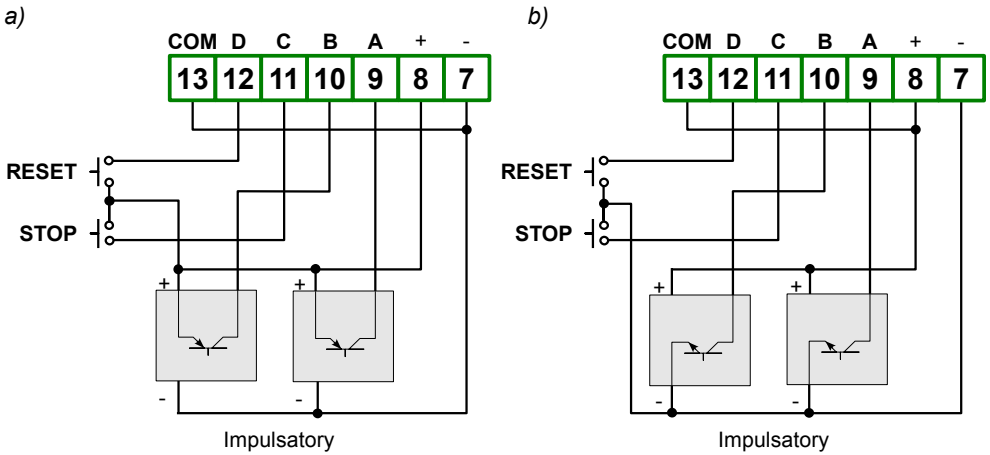

Figure 4.9. An example of pulser connection:
a) with common earth, b) with common plus.

4.4. MAINTENANCE

The unit does not have any internal replaceable or adjustable components available to the user. Pay attention to the ambient temperature in the room where the unit is operating. Excessively high temperatures cause faster ageing of the internal components and shorten the fault-free time of unit operation.
In cases where the unit gets dirty do not clean with solvents. For cleaning use warm water with small amount of detergent or in the case of more significant contamination ethyl or isopropyl alcohol.



Using any other agents can cause permanent damage to the housing.



Product marked with this symbol should not be placed in municipal waste. Please check local regulations for disposal and electronic products.

5. FRONT PANEL DESCRIPTION

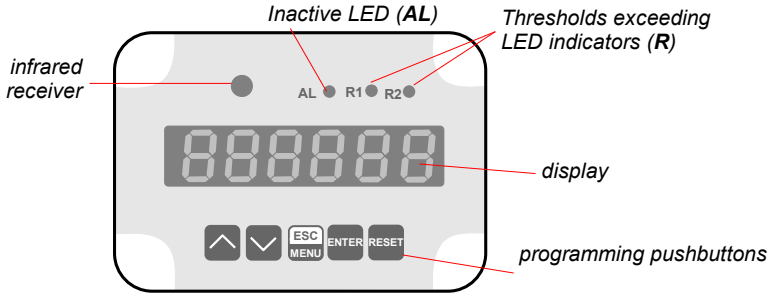

Symbols and functions of push-buttons:



Symbol used in the manual: **[ESC/MENU]**
Functions:
- Enter to main menu (press and hold by at least 2 sec.)
- Exit the current level and Enter to previous menu (or measure mode)
- Cancel the changes made in parameter being edited



Symbol used in the manual: **[ENTER]**
Functions:
- Start to edit the parameter
- Enter to the sub-menu,
- Confirmation of changes made in parameter being edited



Symbol used in the manual: **[^]**
Functions:
- Change of the present menu,
- Modification of the parameter value,
- Monitoring of current thresholds and offset,



Symbol used in the manual: **[v]**
Functions**:**
- Change of the present menu,
- Modification of the parameter value,



Symbol used in the manual: **[RESET]**
Functions:
- zeroing the counter (see: ***„rESEt" option***, page: 26), the reset must be confirmed by **[ENTER]** button.

6. PRINCIPLE OF OPERATION

After turning the power supply on, device ID and software version are showed on the display, next the data **stored while power supply off** are restored and device goes to the selected operation mode.

6.1. MEASUREMENT MODE

In the counting mode (normal mode), the device counts pulses "delivered" to counting inputs A and B (Figure 6.1) depends on selected function. There are available four functions: addition of pulses from A and B inputs ("**Funct**"="**A ╫ b**"), subtraction of pulses from A and B inputs ("**Funct**" = "**A -- b**"), quadrature counting with standard resolution ("**Funct**" ="**quad-1**") , quadrature counting with increased resolution ("**Funct**" ="**quad-4**").

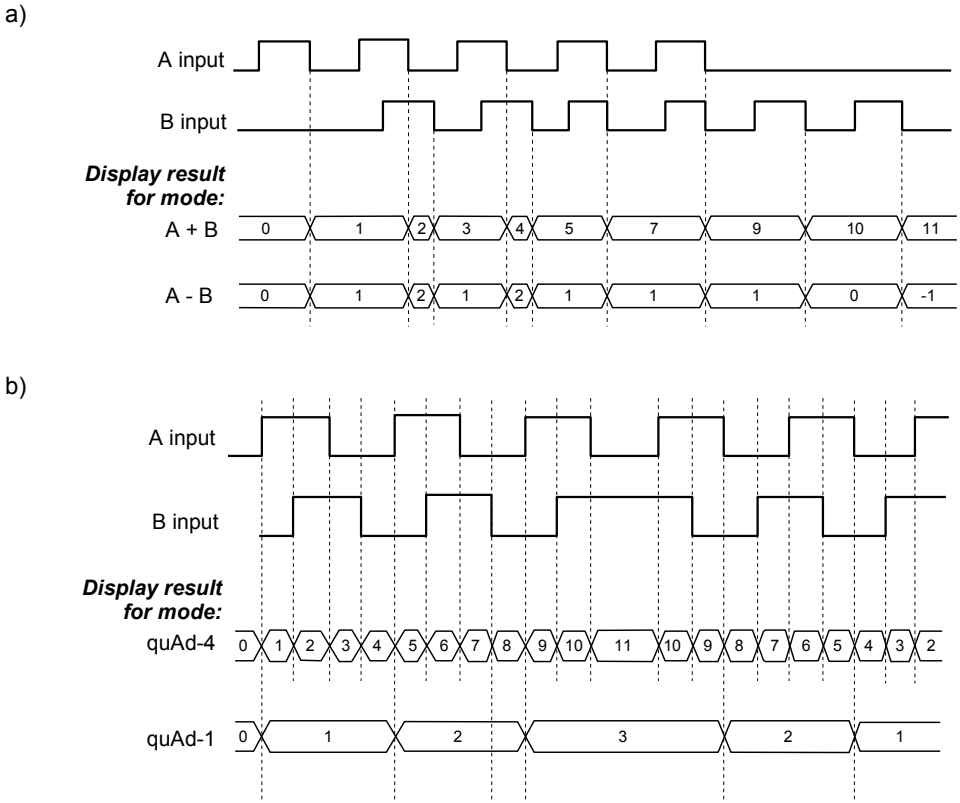

*Figure 6.1. The counting principle of the SLIK counters (parameters: **muL**="1", **div**="1", **oFFSEt**="0"): a) modes "**A+B**", "**A-B**"; b) modes "**quAd-4**", "**quAd-1**"*

Counter recalculates result using three parameters - **mul**, **div** and **offset,** and shows it on the display. If the result is out of ***permissible counter range*** (from"-99999" to "999999"), special warning is displayed in place of the result. The warning type depends on the result and can be:
– **"-Hi-"** - if the result is higher than "999999",
– **"-Lo-"** -if the result is lower than"-99999",

Any time the counter can be zeroed at by:
– pressing of the **[RESET]** push-button and the confirmation of the **[ENTER]** button,
– activating the external reset input (see: ***"rESEt" menu**),*
– presets of the internal registers via RS-485 interface.

After zeroing, the result equal to the "***oFFSEt"*** parameter is displayed. (see: ***"PrESCA" menu***).

In the measurement mode user can check main thresholds values. After pressing **[^]** button, name of the threshold (e.g. **"rELPr1"**) and it's value will be displayed on the display in alternating mode. When the batcher mode is active, additionally the **"oFFSEt"** parameter can be checked. If **[^]** or **[v]** will be pressed in 5 sec again, the next threshold or offset will be displayed, else the device comes back to the measurement mode. If a thresholds values ***free access*** is enabled or thresholds and offset values ***free access*** is enabled (see: ***"SECu" menu***), user can change the value of particular parameter pressing button **[ENTER]** (see: ***PARAMETERS EDITION***).

All accessible parameters can be changed by entering the menu (see: ***DEVICE PROGRAMMING***). Use the local keyboard or the remote controller to do it. (Note: all parameters can be remote changed via RS-485 interface).

- Counting and relays controlling are independent of operation mode of the counter. They are continued (in background) even in menu mode, but in such case maximal input frequency should be not greater than 8 kHz.
- If **"PArUPd"** option is set to **"on rES"** mode, then change of parameters **"muL"**, **"div"**, **"oFFSEt", "Point"** and all parameters of the relays controlling (see **"rELAy"** menu), has no influence on current counting process. In this mode changed parameters will be applied after reset (manual or automatic) or next device power up. If **"PArUPd"** option is set to **"immEd"** mode, then all changes of these parameters are applied immediately.

6.2. BATCHER FUNCTION

To use counter **SLIK-N118** as a batcher, proper connection to controlled circuit must be done (e.g. valves and flow detector) and parameter **"A oFFS"** must be set to ***"on"*** option (see description of ***"SECu" menu***). In example showed on page 17 producer assumes use of two valves: main (biger) and additional (smaller).

To use the counter as a batcher (it means to counter displays how much of some fluid should be poured to fill tank) parameter **"Funct"** should be set to option allowed subtraction of pulses delivered to counting inputs. If programmable input **{ C }** is used to change direction of counting (see description of ***"Pr inP" parameter***), state of this input must be taken into consideration.

Allowable connection methods and counter configurations are showed in table 6.1.

used counting input	***"Funct" parameter***	***"Pr inP" parameter***	***state of "C" input***
B	"A - B"	"dirEct"	no active
B	"A - B"	other than "dirEct"	any
A	"A - B"	"dirEct"	active
A or B	"A + B"	"dirEct"	active
A and B	"quAd 1" or "quAd 4"	"dirEct"	no active
A and B	"quAd 1" or "quAd 4"	other than "dirEct"	any
B and A	"quAd 1" or "quAd 4"	"dirEct"	active

Tab. 6.1. Possible configurations while use device as a batcher

Amount of poured fluid can be changed by parameter **“oFFSEt”**, which is showed first in quick view mode, while parameter **“A oFFS” = “on”** (see page 31). Proposed in example system is showed in Figure 6.2, and proposed circuit diagram in Figure 6.3.

More details of this example are described on page 34.

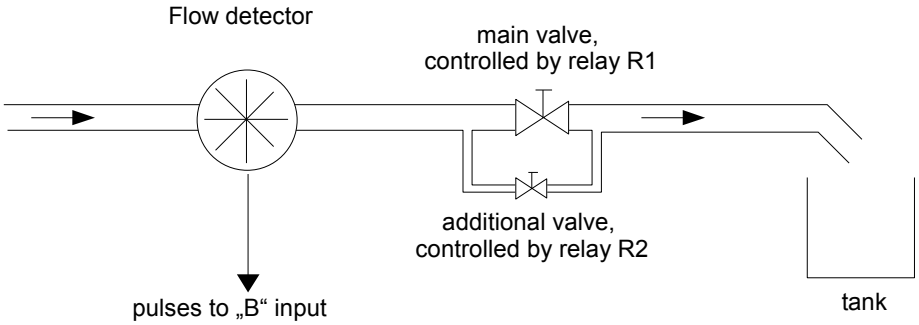

Figure 6.2. Proposed system

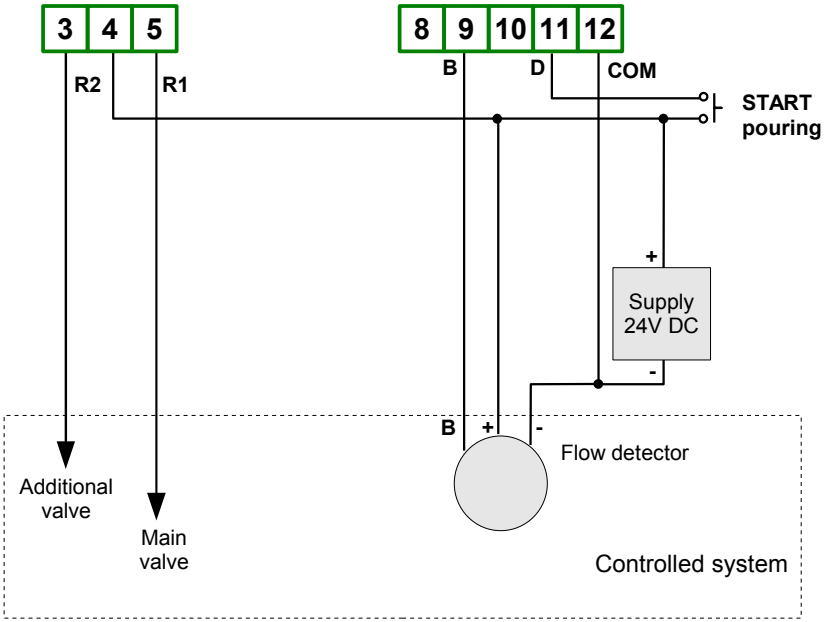

Figure 6.3. Proposed circuit diagram

6.3. AUTOPRESCALER

This feature allows easy setting of counter prescaler (**"muL"**, **"div"** and **"Point"**) to desired number of pulses per unit and displayed value together with decimal point position.

To enter this function select **"AutoPr"** option of **"PrESc"** submenu and press **[ENTER]** button. After that **„ run ?"** message is displayed to avoid of accidental clearing of current settings. Press **[ENTER]** again to acknowledge and start the procedure. Counter sets default values of its parameter first (Notice, that current counter value is being cleared without saving) and goes to counting desired number of pulses per unit (parameter **"div"**).

The device displays **„StArt"** message and waits until user deliver any pulses to counting input, after that displays current number of pulses. User should connect cooperating device to the counter and generate as number of pulses as is essential to display desired value. After counting press **[ENTER]**.

In next step message **"SEtVAL"** is displayed, and counter waits for entering value which should be shown for just counted number of pulses (it is **"muL"** parameter). Press **[ENTER]** again to start edit this value, remember that value is displayed without decimal point, and user should enter whole value with desired fractional positions. Approve entered value pressing and holding **[ENTER]** about 2 seconds.

Next step is selection of decimal point position (parameter **"Point"**). Counter displays **"SetPnt"** message and waits for acknowledge. Press **[ENTER]** and select point position. Approve it pressing **[ENTER]** again. After whole procedure entered values are stored into configuration memory, and value of OFFSET parameter is cleared.



To break autoscaling press **[ESC/MENU]** at any time. This operation causes with restoring of all parameters **"muL"**, **"div"** and **"Point"** as they was defined before starting Autoscaling. The value of the counter is not restored.

6.4. THE DIGITAL FILTER

To enable the connection of the simple switches as detectors, special digital filter has been build into the device. This filter allows the counter to proper counting pulses regardless of the vibration of the contacts of the switches.

The condition of proper counting is providing of time periods of the pulses. The filter can be set to blocking frequencies higher than 10, 20, 30, 40, 50 ,60 ,70, 80 and 90Hz. The time periods of stable states "0" (t_0) and "1" (t_1) of pulses must be not shorter than 1/2F, where F the filtered frequency in Hz. See the table below (Tab. 6.2) to check proper periods for all frequencies.

filter setting (F)	*t_0, t_1*	*input signal frequency*	*input type*
OFF	50,0 µs / 100,0 µs	10 kHz / 5 kHz	electronic input
10	50,0 ms	10 Hz	
20	25,0 ms	20 Hz	
30	16,7 ms	30 Hz	electronic
40	12,5 ms	40 Hz	or contact
50	10,0 ms	50 Hz	input

filter setting (F)	t_0, t_1	input signal frequency	input type
60	8,3 ms	60 Hz	
70	7,2 ms	70 Hz	
80	6,3 ms	80 Hz	
90	5,6 ms	90 Hz	

Tab. 6.2. Time periods t_0 ,t_1 depend on filtered frequency.

When the filter is turned off , time periods t_0 i t_1 must be longer than 50 μs (see Figure 6.4), and maximum counted frequency is equal 10 kHz.

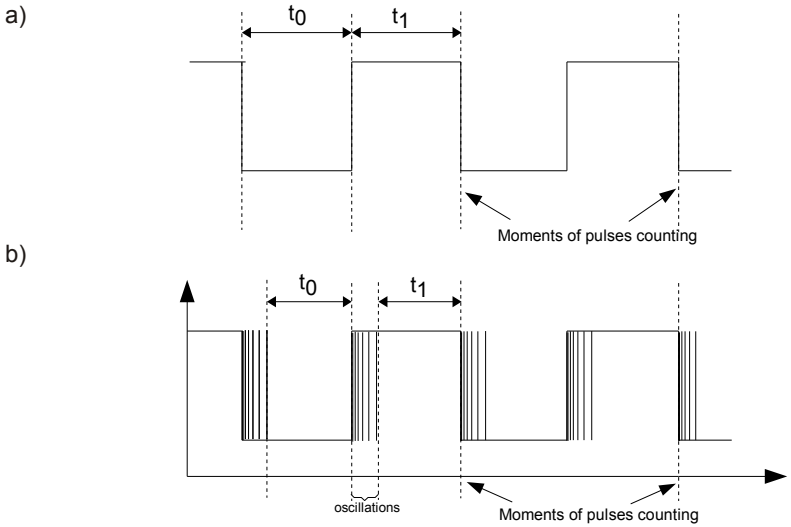

Figure 6.4. The traces of signals:

a) without contacts oscillations, b) with contacts oscillations

6.5. CONTROL OF THE RELAY OUTPUTS

The control of the object (measured signal) is realized via relay outputs. Front panel LEDs named „**R**" indicates the state of particular relay output.
Modes of the control can be changed depend on the values of parameters **"SEtP"**, **"timE"**, **"unit"** and **"modE"** (additional number defines particular relay).

Figure 6.5 presents the principle of relay outputs operation for example values of parameters.

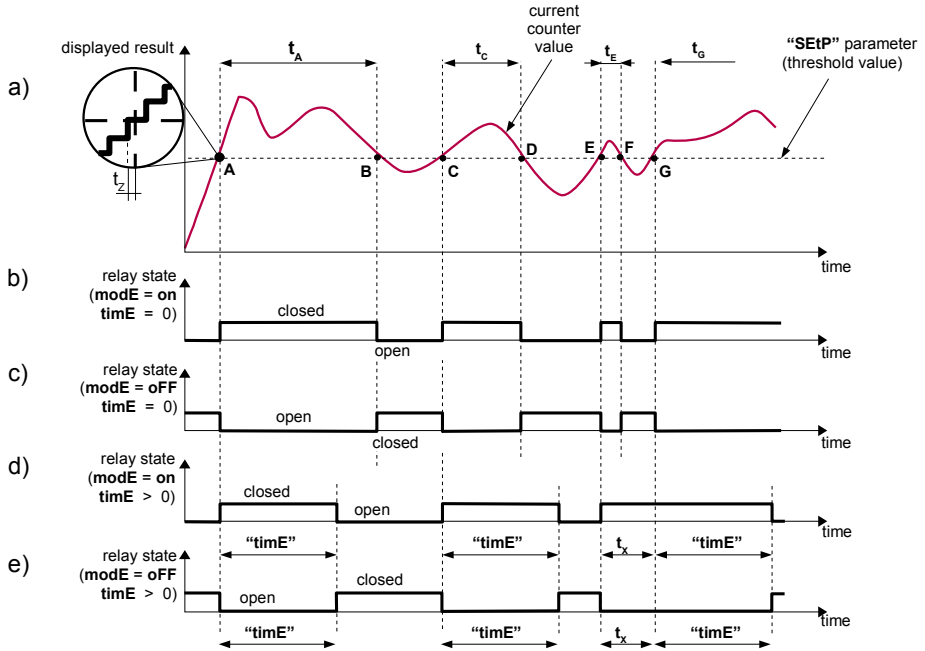

Description:

A, B, C, D, E, F, G	- time points where result exceeds thresholds value,
t_A , t_C , t_E , t_G	- time while counter keeps result at least equal to threshold value
t_X	- time between subsequent exceeds of threshold value (shorter than value of **"timE"**parameter)
t_Z	- delay of relay reaction

Figure 6.5. Principle of relay outputs operation

Parameter **"SEtP"** defines ***threshold*** of relay (trace: a). While normal operation of counter, relay output can change its state to ***active*** **only if** counter value reaches (or exceeds) the ***threshold*** (for „up" counting points A, C, E, G). The ***active*** state of the relay (closed or open) is defined by parameter **"modE"**. Relay R1 reacts to counter value changes immediately. Other relays (if available) need that counter value be same or greater than particular ***threshold*** during at least 20 ms, to change the relay state.

It is possible to set ***AUTORESET*** function for relay R1. This function enables automatic zeroing of the counter, after its value reaches relay R1 ***threshold*** (if **"ArESEt"="on Pr1"**) or after its value is lower than 0 (if **"ArESEt"="on 0"**). After zeroing, counter's value equals to **"oFFSEt"** parameter (if **"ArESEt"="on Pr1"**) or [**SEtP 1** + **"oFFSEt"** - 1] value (if **"ArESEt"="on 0"**).
If ***AUTORESET*** function is active, then relays other than R1 (if available) can be activated if their ***thresholds*** are not greater than relay R1 ***threshold*** (if **"ArESEt"="on Pr1"**) or not lower than 0 (if **"ArESEt"="on 0"**).

Maximum delay between the moment when result reaches the particular threshold and switching on the relay output equals 15ms for OC type output and 20ms for electromechanical relays.

If ***AUTORESET*** function is active, and counter changes its value with high speed, relays other than R1 (if available) can not change it's states to ***active***, because the time between moments when counter reaches their ***thresholds*** and threshold value of relay R1 (greater than for other relays ***thresholds***) is to short.
While ***AUTORESET*** function is active some conditions must be fulfilled:
– If **"ArESEt"="on Pr1"** then „**oFFSEt**" < **"SEtP 1"**
– If **"ArESEt"="on 0"** then „**oFFSEt**" + **"SEtP 1"** > 0
If these conditions will not be fulfilled then counter can work improperly or can't work at all.

Parameter **"timE"** defines how long relay stay ***active*** after its activation by counter value (after moment when counter has reached particular threshold).
- If parameter **"timE"** is set to **"0",** than relay stays in ***active*** state (periods: t_A ,t_C ,t_E ,t_G) as long as counter value is equal or higher than ***threshold value.*** (traces: b, c).
- If parameter **"timE"** is set to value different from **"0"**, than relay stay active during defined time regardless of counter value (traces: d, e). In case when period (t_X) between successive exceeding of threshold value (e.g. between points B and C) is shorter than period defined by parameter **"timE"**, activation period of relay is prolonged by **"timE"** (every time when counter value goes up and reaches threshold).

If parameter **"timE1"** = **"0"** and ***AUTORESET*** function is active, relay R1 will not change it's state to ***active*** or will be activated on very short time because of delays. If user wants to not use particular relay (especially relay R1), its mode of operation should be set to "**noAct**" (e.g. „**mode 1**" ="**noAct**").

Parameter **"modE"** can be set to value ***"modbuS".*** In such case it is possible to drive relays via RS-485 interface. In this case relays are independent on counter value, and „**time**" and „**SEtP**" settings, and change of it's state can be done exclusively via RS-485 interface, as presets of holding registers (see: ***LIST OF REGISTERS***) . While parameter **"modE"** is set to value ***"on"*** or ***"oFF"***, presets of these registers do not causes any reaction, and reading of these registers show actual state of particular relays.

If **"modbuS"** mode is active, than after power down and up relays are inactive.

All parameters corresponding to relay outputs are described in details in chapter ***"rELAy" menu***.

7. DEVICE PROGRAMMING

The device menu allow user to set all parameters connected to operation of measurement input, control modes, critical situations behaviour, communication via RS-485 and access settings. The meaning of the particular parameters is described in paragraph ***MENU DESCRIPTION***.

Some of the parameters can be accessed without menu entering (quick view mode). After pressing **[^]** button, name of the threshold (e.g. **"rELPr1"**) and it's value will be displayed on the display in alternating mode. When the batcher mode is active, additionally the **"oFFSEt"** parameter can be checked. If **[^]** or **[v]** will be pressed in 5 sec again, the next threshold or offset will be displayed, else the device comes back to the measurement mode. If a thresholds values ***free access*** is enabled or thresholds and offset values ***free access*** is enabled (see: ***"SECu" menu***) , user can change the value of particular parameter pressing button **[ENTER]** (see: ***PARAMETERS EDITION***).



If particular parameter has been changed and confirmed in quick view mode, its new value is displayed in alternating mode with parameter name by few seconds. Confirmed changes may be checked or user can switch viewed parameter pressing **[^]** or **[v]** button.

7.1. PROGRAMMING MENU

To enter main menu (being in the measurement mode) operator must to press and hold at least 2 sec. **[ESC/MENU]** button. If the user password is defined (see parameter **"SEtCod"**, menu ***"SECU"***), operator have to enter correct one before proceeding to menu options. Entering of the passwords is similar to the edition of numeric parameters (see: ***PARAMETERS EDITION***), however presently editing digit is showed only on the display, other digits are replaced by "-" sign.

After entering of last digit of the password first menu position will be displayed (if the password is correct) or warning "**Error**" in other case.



Pay attention when device parameters are being changed. If it is possible, turn off controlled installation (machine).

Functions of the buttons while sub-menu and parameters choice:



Selection of sub-menu or parameter for editing. Name of selected item (sub-menu or parameter) is displayed.



Operation of **[ENTER]** button depend on present menu position:

- if the name of some sub-menu is displayed - enter this sub-menu; name of the first parameter (or next level sub-menu) is displayed,
- if the name of some parameter is displayed - enter the edition of this parameter; present value of the parameter is displayed,



[ESC/MENU] button allow user to exit present menu level and goes to upper level menu (or measurement mode).



After about 1 min. since last use of the buttons, device exits the menu mode and returns to the measurement mode (only if no parameters are in editing mode).

7.2. PARAMETERS EDITION

To start edition of any parameter user should select name of desired one using **[^] [v]** buttons and then press **[ENTER]**.

7.2.1. Numeric parameters (digit change mode)

Numerical parameters are displayed as decimal numbers. The mode of its new value entering depends on chosen edit method (see parameter „**Edit**").

In mode "by digit" („**Edit**"="**dig**") pressing one of the keys **[^]** or **[v]** causes change of current position (flashing digit) or the sign (+/-). Short pressing of the **[ENTER]** button causes change of the position (digit).

Press **[ENTER]** at least 2 seconds to accept the changes, after that question **"SEt?"** is displayed, and user must to confirm (or cancel) the changes. To conform changes (and story it in EEPROM) press **[ENTER]** button shortly after **"SEt?"** is displayed. To cancel the changes press **[ESC]** button shortly after **"SEt?"** is displayed. After that device returns to the menu.

7.2.2. Numeric parameters (slide change mode)

In "slide change" mode („**Edit**"="**Slid**"), buttons **[^]** and **[v]** has different functions.

To increase edited value press (or press and hold) **[^]** button only, the increasing became quickest as long as button **[^]** is pressed. To slow down the increasing, button **[v]** can be used. If **[v]** is pressed shortly (and button **[^]** is still pressed), increasing slow down for a moment only, if **[v]** is pressed and held while button **[^]** is still pressed the increasing slow down and will be kept on lower speed.

To decrease edited value press (or press and hold) **[v]** button only. The decreasing became quickest as long as button **[v]** is pressed. To slow down the decreasing, button **[^]** can be used. If **[^]** is pressed shortly (and button **[v]** is still pressed), decreasing slow down for a moment only, if **[^]** is pressed and held while button **[v]** is still pressed the decreasing slow down and will be kept on lower speed.

Press **[ENTER]** at least 2 seconds to accept the changes, after that question **"Set?"** is displayed, and user must to confirm (or cancel) the changes. To conform changes (and story it in EEPROM) press **[ENTER]** button shortly after **"SEt?"** is displayed. To cancel the changes press **[ESC]** button shortly after **"SEt?"** is displayed. After that device returns to the menu.

7.2.3. Switch parameters ("LIST" type)

Switch parameters can be described as a sets of values (a lists) out of which only one of the options available on the list can be selected for the given parameter. Options of switching parameter are selected using **[^]**, **[v]** keys.

Short pressing of **[ENTER]** causes in displaying of the acknowledge question (**"SEt?"**). If key **[ENTER]** is pressed again, the changes are accepted, stored in EEPROM end the edition process finished. Pressing the key **[ESC]** after **"SEt?"** causes in cancelling of made changes and returning to menu.

Functions of buttons when editing numeric and switching parameters:



While editing numeric parameter:
- change of current (flashing) digit
- slide change of value (acceleration, deceleration, direction change)

While editing switch parameter - selection of switch parameter.



If numerical parameter is being edited, a short press of **[ENTER]** button change edited position. A long press of **[ENTER]** button (at lest 2 sec.) causes of display a **"SEt?"** ask, which allow user to make sure if change of the parameter value is correct. If switch parameter is being edited, a short press of **[ENTER]** button causes of display a **"SEt?"** ask. When **[ENTER]** button is pressed again (while **"SEt?"** is displayed) the new value of the parameter is stored in EEPROM memory.



Pressing this button operator can cancel the changes done up to now (if they were not approved by **[ENTER]** button after the **"SEt?"** ask) and come back to menu

7.3. MENU DESCRIPTION

"Cd 0 - - -" Password checking. If password is set different from „**0000**", than every enter to main menu follows the entering of password. If entered password is correct first menu position else warning "**Error**" will be displayed, and unit returns to measurement mode.

Due to problem with direct displaying of "**m**" letter, it is exchanged with special sign " ṁ ". Independently in user manual letter „**m**" is used to make it more readable (example: **"modE"**).

7.3.1. "rELAy" menu

This menu allows to configure the operation mode of relays and LEDs marked „**R**" (e.g. „**R1**"). If there are few relay outputs available, then every output has its own configuration menu (e.g. menu „**rELAy2**" for relay (LED) „**R2**"). Principle of the relays operation is described in paragraph ***CONTROL OF THE RELAY OUTPUTS***.

If **"PArUPd"** option is set to **"on rES"** mode, then change of parameters **"muL"**, **"div"**, **"oFFSEt", "Point"** and all parameters of the relays controlling (see **"rELAy"** menu), has no influence on current counting process. In this mode changed parameters will be applied after reset (manual or automatic) or next device power up. If **"PArUPd"** option is set to **"immEd"** mode, then all changes of these parameters are applied immediately.

"SEtP" - threshold of the relay (range -99999 ÷ 999999). Negative values can be input by selecting a "-" sign on first digit (to change value use **[^]** and **[v]** buttons).

"modE" - relay operation mode, this parameters define the ***active state*** of the relay, it means state of relay while the counter reaches **threshold *value***, at "up counting", available modes:

"noAct" - the relay is not active (permanent turned off)

"on" - the relay is turned on (closed) when result reaches ***threshold value***

"oFF" - the relay is turned off (opened) when result reaches ***threshold value***

"modbuS" - the relay is controlled via RS-485 interface, independently on the counter result and parameters **"SEtP"** and **"timE"**.

- When a particular LED lights, its mean the relay is closed,
- If parameter ***"modE"*** is set to ***"modbuS"*** value, after power supply off and on again, relays are open.

"timE" - the time period of the relay ***active state***. Can be set to values from "0.1" to "99.9", and express the time in seconds or minutes (depending on **"unit"** parameter). If this parameter is set to value different from „0.0" the relay is ***active*** independently of the result (even if the counter is zeroed). If this parameter is set to „0.0" the relay stays ***active*** as long as the result is same or higher of the particular ***threshold value***.

If this parameter is set to „0.0", and the ***AUTORESET*** function is active, the counter will be zeroed but relays can stay ***inactive*** or will be activated on very short time because of delays. If user wants to not use particular relay, its mode of operation should be set to "**noAct**" (e.g. „**mode 1**" ="**noAct**").

"unit" - unit of time for **"timE"** parameter. Can be set on one of two values:

"min" - minutes,
"SEC" - seconds.

"rEF" - reference point (offset) of relay threshold. Available values:

"Std" - use 0 value as reference point (offset)
"rELPr1" - use threshold of the relay **R1** as reference point (offset)

This parameter is not available for relay R1. If **rELPr1** option is set, then relay threshold is modified by relay **R1** threshold (**"SEtP 1"** value). It means that state of relay (different than **R1**) will be changed earlier or later in reference to value of the relay **R1** threshold.

7.3.2. "Funct" parameter

This parameter allows to define operation mode of the counter, and can be set to one of the values:

"A + B" - add mode; addition of pulses from both counting inputs (A and B) to current counter result.

"A - B" - subtract mode; Pulses from input A are added to, and pulses from input B ad subtracted from counter result.

"qUAd-1" - quadrature mode 1; This option enables cooperation of inputs A and B as quadrature input with normal resolution, it means that counter is incremented (decremented) by 1 every single quadrature cycle on inputs A and B

"qUAd-4" - quadrature mode 4; This option enables cooperation of inputs A and B as quadrature input with increased resolution, it means that counter is incremented (decremented) by 1 every one-fourth of single quadrature cycle on inputs A and B.

7.3.3. "Pr inP" parameter

This parameter defines the function of the programmable input **{ C }**. When ***active state*** is delivered to programmable input, it causes of the activating of particular function. This parameter can be set to one of the values:

"diSAbL" - programmable input is not active,

"dirEct" - active signal on the programmable input changes counting function (counting direction) from ***„A-B"*** to ***„B-A",*** from ***„A+B"*** to ***„-(A+B)"***.

"inhibi" - programmable input stops the counting,

7.3.4. "rESEt" parameter

This parameter determines the counter zeroing (reset) sources, and can be set to one of the values:

"ALL" - this option enables both manual (using **[RESET**] button) and electronic reset.

"EL" - this option enables external reset input **{ D }**. If an active signal is delivered to the input **{ D }** the counter is zeroed, and the result stays zero (or equal to offset) as long as the signal on input **{ D }** is active. To made correct zeroing, input signal **{ D }** must be active at least by 1 ms. In this mode manual reset is disabled.

"mAn" - manual reset only. This value enables only manual reset, which can be done by pressing the [**RESET**] button on the front panel. This operation must to be approved by [**ENTER**] button. After zeroing counter displays value equals to **"oFFSEt"** parameter. In this mode electronic reset is disabled.

"nonE" - this option disables both manual and electronic reset.

Zeroing of the counter can be done via RS-485 interface (by presets of some registers with value 0000h) independently of the **„rESEt"** parameter value. After zeroing the counter, displayed value is equal to „**oFFSEt"** parameter. Remote zeroing is available in all modes (**"ALL"**, **"EL"**, **"mAn"**, **„nonE"**).

7.3.5. "ArESEt" parameter

This parameter enables the auto zeroing mode (***AUTORESET*** function). If ***AUTORESET*** is active the counter is zeroed instantaneously after result reaches the relay R1 threshold value (**SEtP 1**) or after result reaches value lower than 0. This parameter can be set to:

"oFF" - ***AUTORESET*** function is inactive.
"on Pr1" - counter is zeroed after result reaches relay R1 ***threshold.*** After zeroing, counter value is equal to **"oFFSEt"** value
"on 0" - counter is zeroed after result reaches value lower than 0**.** After zeroing, counter value is equal to (**SEtP 1** + **"oFFSEt"** - 1) value



While ***AUTORESET*** function is active some conditions must be fulfilled:
– If **"ArESEt"="on Pr1"** then „**oFFSEt**" < **"SEtP 1"**
– If **"ArESEt"="on 0"** then „**oFFSEt**" + **"SEtP 1"** > 0
If these conditions will not be fulfilled then counter can work improperly or can't work at all.

7.3.6. "FiLtEr" parameter

This parameter enables the digital filter, which filters the contacts oscillations of switches (mechanical detectors). Digital filter eliminates the counting errors when mechanical detectors are used. This parameter can be set to values: **"OFF"**, **"10"** ÷ **"90",** where its value express the maximum passed frequency, if **"OFF"** is set the filter is disabled (see ***DIGITAL FILTER***, page 18).

7.3.7. "PArUPd" parameter

This option allows to define when such parameters as **"muL"**, **"div"**, **"oFFSEt"**, **"Point"** and all relay control parameters will be updated if some changes are applied in device menu. Possible values:

"immed" - changed parameters are updated immediately,
"on rES" - changed parameters will be updated after next reset (manual or automatic) or after next device power up.

7.3.8. "PrESCA" menu

This menu contains parameter which configure the prescalling parameters (recalculations of counted pulses). This menu allows the user to set individual prescalers, and to scale the counter in desired units.



If **"PArUPd"** option is set to **"on rES"** mode, then change of parameters **"muL"**, **"div"**, **"oFFSEt", "Point"** and all parameters of the relays controlling (see **"rELAy"** menu), has no influence on current counting process. In this mode changed parameters will be applied after reset (manual or automatic) or next device power up. If **"PArUPd"** option is set to **"immEd"** mode, then all changes of these parameters are applied immediately.

"muL" - multiply coefficient , range -99999 do 999999, except 0,

"div" - divide coefficient, range 1 do 999999, (this parameter defines the internal modulo counter),

"oFFSEt" - offset coefficient, range: -99999 do 999999 (constant value added to the result to move the zero point of the current scale),

"Point" - decimal point position.

Displayed result is calculated due to the expression:

$$W = (L_m \times "muL") + \frac{L_w \times "muL"}{"div"} + "oFFSEt"$$

where: W - displayed result
L_m - the internal main counter value
L_w - the internal (modulo) precounter value

Parameter **"div"** can't be set to "000000", entered value is controlled by firmware.

The precounter (modulo) and main counter are internal registers of the counter's firmware and they contain not calculated (by **mul** and **div** parameters) numbers of pulses delivered to the counting inputs {A} and {B}. The modulo counter contains the fractional part of the result (ratio of **„div"** parameter). Main counter contains the integer part of the result (not recalculated). If parameter "**div**" is set to 1, then main counter contains the number of all pulses delivered to counting inputs.

Firmware uses fixed point arithmetic (rounding down).

"AutoPr" - autoprescaling procedure. Pressing **[ENTER]** starts display of message **„run ?"**. To start procedure of setting parameters **"muL", "div"** and **"Point"** press **[ENTER]** again. To cancel this procedure press **[ESC/MENU]**. Detailed description of this procedure user can find in chapter ***AUTOPRESCALER*** on page 18.

7.3.9. "rS-485" menu

This menu is connected with RS-485 interface, and sets his properties:

"Addr" - this parameter defines the address of the device, accordingly to Modbus protocol. It can be set in range from 0 to 199. If the value 0 is set then device, responds to frames with address 255 (FFh).

"bAud" - this parameter determines RS-485 interface baud rate. It can be set to one of 8 possible values: **"1.2"**, **"2.4"**, **"4.8", "9.6"**, **"19.2"**, **"38.4"**,**"57.6"**,**"115.2"**, which respond to the baud rates of 1200, 2400, 4800, 9600, 19200, 38400, 57600 and 115200 bit/s respectively.

"mbAccE" - this parameter sets the access to the configuration registers of the device. Possible values:

"on" - configuration registers can be set via RS-485 interface,
"oFF" - configuration registers can not be set via RS-485 interface.

The access to registers no 04h ÷ 08h cant be denied by **"mbAccE"** parameter (see: ***LIST OF REGISTERS***).

"mbtimE" - this parameter defines maximal time (sec) between following frames received by the device. Parameter "**mbtimE**" can be set to values from 0 to 99 seconds. The value 0 means that the time will be not controlled.

”rESP” - this parameter defines minimal (additional) delay between the Modbus message and the answer of the device (received and sent via RS-485 interface). This additional delay allows the device to work with poor RS-converters which do not works properly on baud rates higher than 19200. This parameter can be set to one of values:

”Std” - answer as quick as possible, no additional delay

” 10c”
” 20c”
” 50c”
”100c”
”200c” } - answer delayed of 10, 20, 50, 100 of 200 chars respectively, where one character time depends on selected baud rate

In the most cases parameter **”rESP”** should be set to **”Std”** (no additional delay). Unfortunately for some third party RS-converters **”rESP”** should be adjusted experimentally. Table 7.1 contains most frequently used values.

”bAud” parameter	“38.4”	“57.6”	“115.2”
”rESP” parameter	“ 10c”	“ 20c”	“ 50c”

*Tab.7.1. Settings of ”**rESP**” parameter*

7.3.10. ”SECu” menu

This menu contains presets connected with availability of other parameters:

“SEtCod” - user password (4-digits number). If this parameter is set at value **“0000”**, user password is turned off.

If the user do not remember his password, the access to the menu is possible by the “one-use password”. To get this password please contact with Marketing Division. “Single use password” can be used only one time, after that it is destroyed. Entering this password causes in clearing of user password, it means sets the user password to „0000”.

The “one-use password” can be used **ONE TIME ONLY**, it is impossible to use it again! The “one-use password” can be restored by Service Division only.

“A rEL1, A rEL2” - this options permits user (**”on”**) or prohibits (**”oFF”**) to modify the thresholds of the relays/LEDs R1 ÷ R2 without knowledge about user password.

The diagram of quick view mode is presented in figure 7.1.

“A oFFS” - this option permits user (**”on”**) or prohibits (**”oFF”**) to modify the **”oFFSEt”** parameter value without knowledge about user password. The possibility of offset changing without knowing of password, allows to use of the counter as a batcher

From counting (batching) mode to quick check of the thresholds user can goes by pressing **[^]** button. Depending on the **„A oFFS"** value it is possible to use two different operation modes of „quick view" (see: Figure 7.1, Figure 7.2).

Number of accessible parameters for viewing/edition depends on device version.

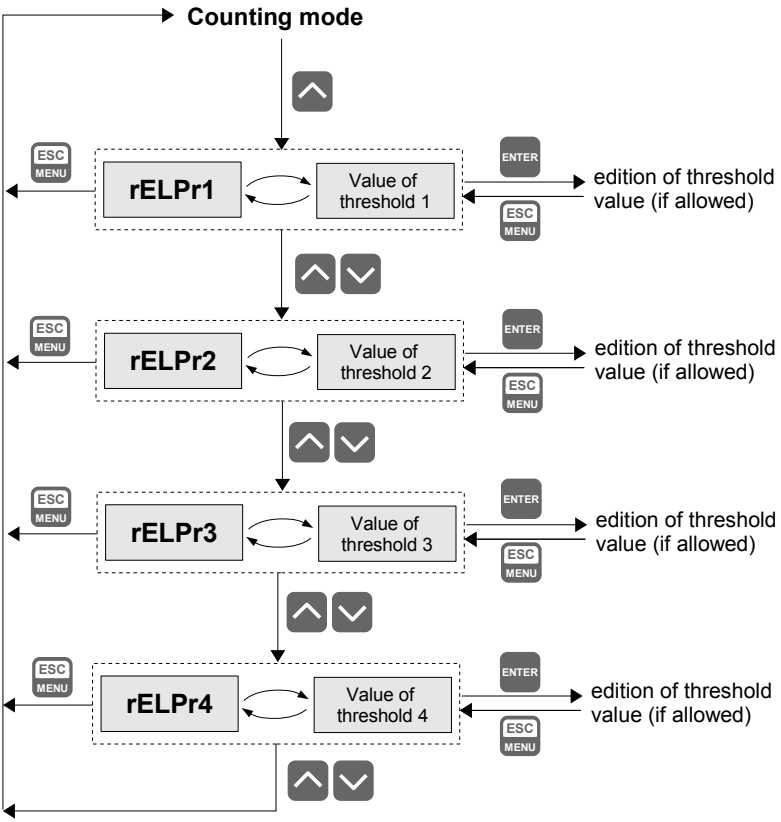

*Figure 7.1. Operation of „quick view" while **„A oFFS" = „oFF"***

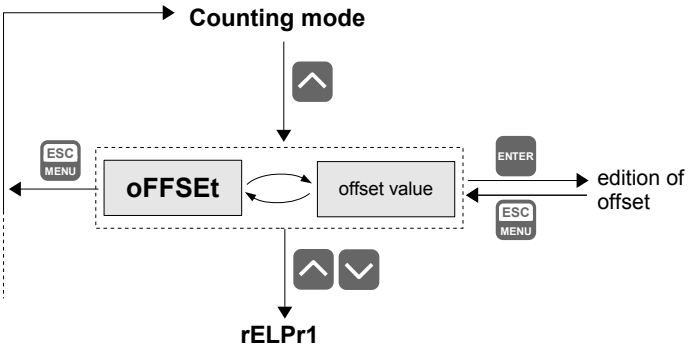

*Figure 7.2. Operation of „quick view" while **„A oFFS" = „on"***

7.3.11. "briGHt" parameter

This parameter allows user to set bright of the LED display, bright can be set to conventional values from 1 to 8.

7.3.12. "Edit" parameter

This parameter allows to change the edition mode of numerical parameters:

"dig" - the change to "by digit" mode,
"Slid" - slide change mode.

7.3.13. "dEFS" parameter

This setting allows to restore the factory settings of the device. To get the access to this option special password is required: „5465", next the device displays acknowledge question **„SEt?"**. Press **[ENTER]** to acknowledge the restoring of factory settings or **[ESC]** to cancel.

7.4. MENU STRUCTURE

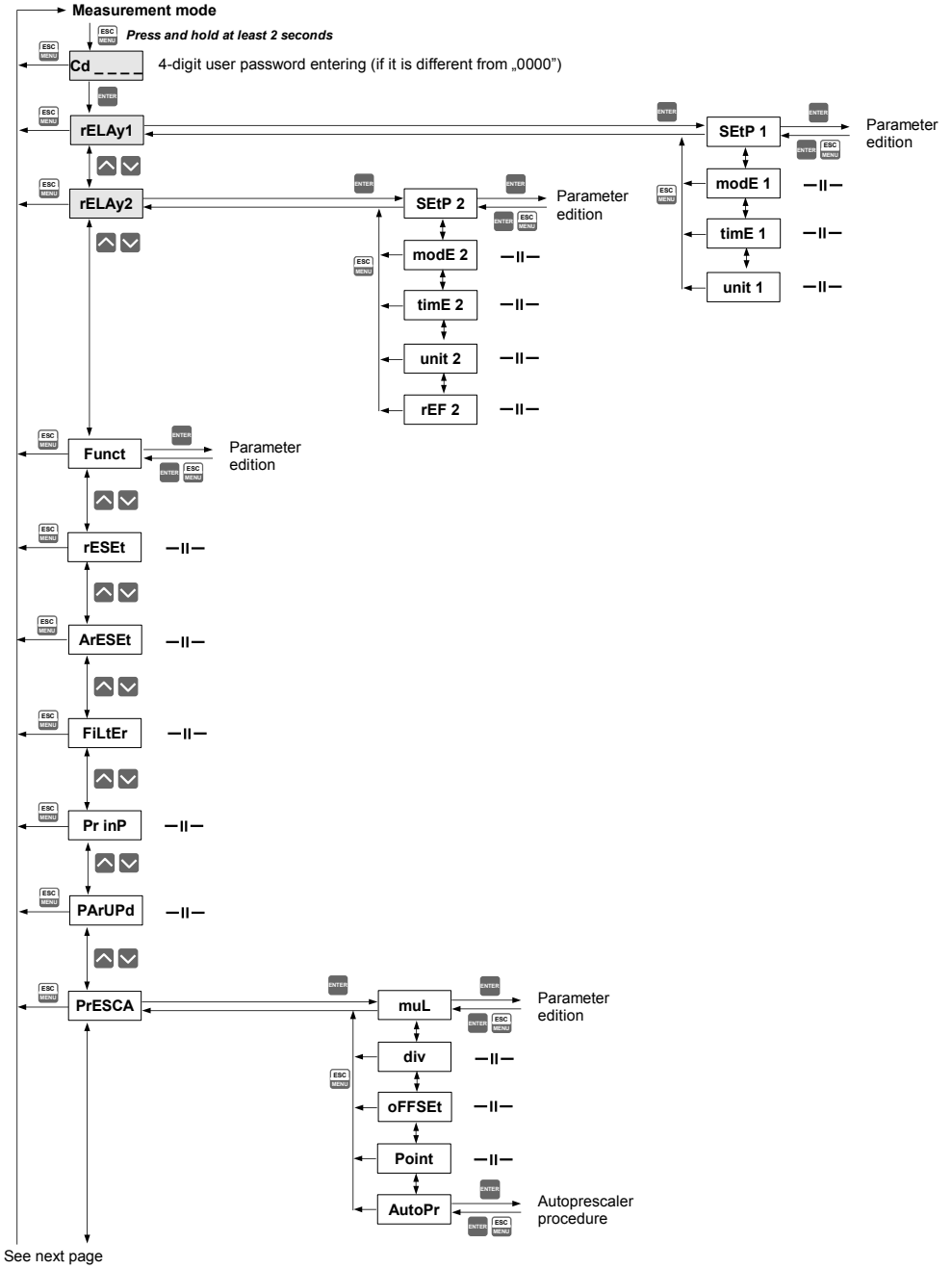

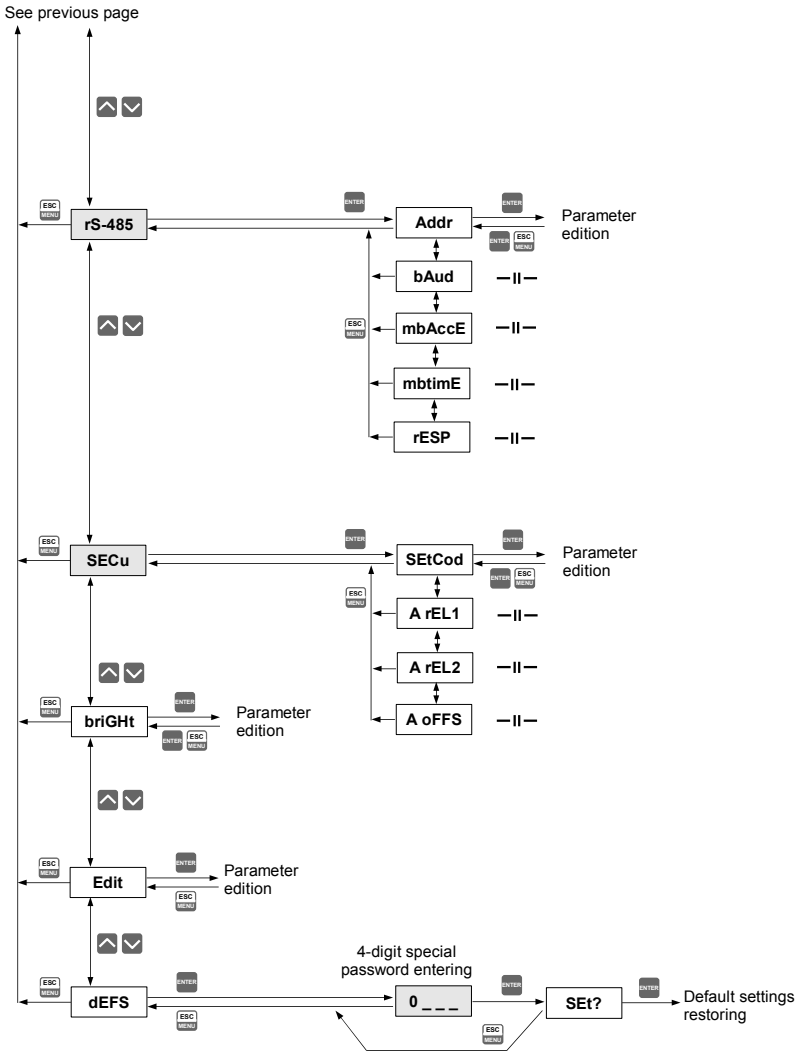
See previous page
rS-485
Addr
bAud
mbAccE
mbtimE
rESP
Parameter edition
SECu
SEtCod
A rEL1
A rEL2
A oFFS
briGHt
Parameter edition
Edit
Parameter edition
dEFS
4-digit special password entering
0 _ _ _
SEt?
Default settings restoring

8. EXAMPLES OF PRESCALER PARAMETERS CALCULATION

Problem: to measure length of the line with assumed precision.
Essential data: - number of pulses per revolution given by sensor
- circumference of measurement circle
- assumed measurement unit and resolution (mm, cm, dm, m).

Example 1

Data:
- circumference of measurement circle: **25** cm
- number of pulses: **100** pulses/revolution
- unit **cm,** resolution **1 cm**

25 cm = 1 revolution = 100 pulses

Settings :
mul = “25”
div = “100”
oFFset = “0”
point = “0.”

Example 2

Data:
- circumference of measurement circle: **50** cm
- number of pulses: **100** pulses/revolution
- unit **dm**, resolution **0,1 dm**

50 cm = 5 dm = 1 revolution = 100 pulses

Settings:
mul = “50”
div = “100”
oFFset = “0”
point = “0.0”

Example 3 - counter **SLIK-73** used in batcher function (see: Figure 6.2, 6.3)

Data:
– flow meter: **100** pulses/ L
– main valve flow (valve 1): about **10** L / sec.
– additional valve flow (valve 2): about **1** L / sec.
– measurement precision: up to **0,1** L.
– valve is open while relay are closed

Settings:
mul = “1”
div = “10”
Point = “0.0”

relay R1 threshold = ”6.0”	- we assume that, since beginning of start of main valve closing, it will flow about 3 L of water
“A rEL1” = ***“on”***	- access to threshold edition without password
relay R2 threshold = ”3.0”	- we assume that, since beginning of start of additional valve closing, it will flow about 0.3 L of water
“A rEL2” = ***“on”***	- access to threshold edition without password
“A oFFS” = ***“on”***	- access to offset edition without password
“Funct” = ***“A - B”***	- input **”B”** is used
programmable input **”C”**	- non active if **”Pr inP”** = **”dirEct”**, or any if **”Pr inP”** is set to other value setting

To change desired quantity of water parameter **“oFFsEt”** should be changed, so it is displayed first in „quick view” mode.

Pouring starts after pressing of external button [**START pouring**] (Figure 6.3).

Principle of operation of batcher function from example 3

After press of [**START pouring**] button (Figure 6.3) offset value is showed on the display, next (while pouring) display shows how much water remains to pour. Start causes of closing of both relays – both valves are opened. Flow meter generates pulses delivered to counting input **{ B }**, so counter decreases it's value. When counter down counts below threshold **"SEtP1"** value (in example it is value 6.0), then relay 1 will be opened – main valve will start to close itself. Closing process need about 0.5 sec, so about 3L of water will flow during this time via main valve. Pouring is being continued, via additional valve. When counter will down count below threshold **"SEtP2"** value (in this example 0.3), relay R2 will be opened – additional valve will start closing, it takes about 0.5 sec. About 0.3L of water will flow during this time, what ends pouring. After that counter should show 0.0 (or value very close to 0.0).

Next pouring cycle can be initiated by [**START pouring**] button.

9. THE MODBUS PROTOCOL HANDLING

Transmission parameters: 1 start bit, 8 data bits, 1 or 2 stop bit (2 bits are send, 1 and 2 bits are accepted when receive), no parity control
Baud rate: selectable from: 1200 to 115200 bits/second
Transmission protocol: MODBUS RTU compatible

The device parameters and display value are available via RS-485 interface, as HOLDING-type registers (numeric values are given in U2 code) of Modbus RTU protocol. The registers (or groups of the registers) can be read by 03h function, and wrote by 06h (single registers) or 10h (group of the registers) accordingly to Modbus RTU specification. Maximum group size for 03h and 10h functions can not exceeds 16 registers (for single frame).

The device interprets the broadcast messages, but then do not sends the answers.

9.1. LIST OF REGISTERS

Register	*Write*	*Range*	*Register description*
01h[1]	No	see descr.	Display value - higher word.
02h[1]	No	see descr.	Display value - lower word.
03h	No	see descr.	The status of the displayed value: **0000h** - data valid, **0080h** - overflow, warning "**-Hi-**" is displayed **0040h** - underflow, warning "**-Lo-**" is displayed
04h[2]	Yes	see descr.	State of precounter - this is internal modulo **N** counter, where **N = "div"**, overfill of this counter causes incrementation/decrementation of main counter.
05h[2]	Yes	see descr.	State of precounter (low word)
06h[2]	Yes	see descr.	Main counter value - high word
07h[2]	Yes	see descr.	Main counter value - low word.

Register	Write	Range	Register description
08h	Yes	see descr.	State of the relays (binary format) (1 - on, 0 - off): **00000000 000000ba** **a** - relay R1; **b** - relay R2; If written, only **a, b** bits are important (others are ignored) these bits allows user to control the relays via RS-485 interface
09h	No	see descr.	The state of relays task in binary format (1 – relay was being activated (or still is), 0 – relay wasn't being activated, and will be as soon as result reaches the threshold : **00000000000000ba** **a** - relay R1; **b** - relay R2; This register is very important while relays are being activated on defined time period. It allows the counter to know if relay was activated or not.
10h	Yes	0 ÷ 1	**"PArUPd"** option (parameters update method): **0** - mode **"immEd"** (update immediately), **1** - mode **"on rES"** (update on reset or power up)
11h	Yes	0 ÷ 2	**"Pr inP"** option (programmable input operation mode): **0** - mode **"diSAbL"**, disabled, **1** - mode **"dirEct"**, counter direction (function of inputs), **2** - mode **"inhibi"**, holding of the counter.
12h	Yes	0 ÷ 3	**"rESEt"** option (main counter clearing mode): **0** - mode **"ALL"**, **1** - mode **"EL"**, reset with „D" input and RS-485 interface **2** - mode **"mAn"**, reset with **[RESET]** button and RS-485 interface **3** - mode **"nonE"**, reset with RS-485 interface only
13h	Yes	0 ÷ 1	**"ArESEt"** option (main counter autoreset): **0** - **"oFF"**, autoreset disabled **1** - **"on Pr1"**, autoreset on relay R1 threhold **2** - **"on 0"**, autoreset below 0 (zero) value
14h	Yes	0 ÷ 9	**"FiLtEr"** option (filtering rate): **0** - for input signal up to 10kHz frequency; **1** - up to 10Hz; **2** - up to 20Hz; **3** - up to 30Hz; **4** - up to 40Hz; **5** - up to 50Hz; **6** - up to 60Hz; **7** - up to 70Hz; **8** - up to 80Hz; **9** - up to 90Hz;
15h	Yes	0 ÷ 3	**"Funct"** option (counter operation mode): **0** - normal mode **"A + B"**, addition **1** - normal mode **"A - B "**, subtraction **2** - quadrature mode **"qUAd 1"**, resolution: incremented by 1 every single quadrature cycle **3** - quadrature mode **"qUAd 4"** , resolution: incremented by 1 every one-fourth of single quadrature cycle
16h	Yes	see descr.	**"muL"** in **"PrESCA"** menu (main counter multiplier, high word); counter always shows main counter value recalculated by prescaler coefficients
17h	Yes	see descr.	**"muL"** in **"PrESCA"** menu (main counter multiplier, low word); Cumulative value of registers 16h and 17h: from -99999 to 999999

Register	Write	Range	Register description
18h	Yes	see descr.	**"div"** parameter in **"PrESCA"** menu (input divider, high word); content of main counter is incremented by 1 every **n** pulses (standard or quadrature cycles, or one-fourths of quadrature cycle) on inputs A and B, where **n** is content of precounter registers
19h	Yes	see descr.	**"div"** parameter in **"PrESCA"** menu (input divider, low word); Cumulative value of registers 18h and 19h: from 1 to 999999
1Ah[6]	Yes	see descr.	**"oFFSEt"** parameter in **"PrESCA"** menu (high word)
1Bh[6]	Yes	see descr.	**"oFFSEt"** parameter in **"PrESCA"** menu (low word) Cumulative value of registers 1Ah and 1Bh: from -99999 to 999999
1Ch	Yes	0÷5	"**Point** " parameter in "**Presca**" menu (decimal point position) **0** - " **0**"; **1** - " **0.0**"; **2** - " **0.00**"; **3** - "**0.000**"; **4** - "**0.0000**"; **5** - "**0.00000**"
20h[3]	Yes	0 ÷ 199	Device address
21h	No	20C5h	Device identification code (ID)
22h[4]	Yes	0 ÷ 7	**"bAud"** parameter in **"rS-485"** menu (baud rate); **0** - 1200 baud; **1** - 2400 baud; **2** - 4800 baud; **3** - 9600 baud; **4** - 19200 baud; **5** - 38400 baud; **6** - 57600 baud; **7** - 115200 baud
23h[5]	Yes	0 ÷ 1	**"mbAccE"** parameter in **"rS-485"** menu (permission to write registers via RS-485 interface); **0** - write denied ; **1** - write allowed
24h	Yes	see descr.	Parameters of "**SECU**" menu (binary format (0 - „**oFF**", 1 - „**on**"): **bit 0** - "**A rEL1**" parameter; **bit 1** - "**A rEL2**" parameter **bit 2** - "**A rEL3**" parameter; **bit 3** - "**A rEL4**" parameter; **bit 4** - "**A oFFS**" parameter
25h	Yes	0 ÷ 5	**"rESP"** parameter in **"rS-485"** menu (additional response delay); **0** - no additional delay; **1** - "**10c**" option; **2** - "**20c**" option; **3** - "**50c**" option; **4** - "**100c**" option; **5** - "**200c**" option;
27h	Yes	0 ÷ 99	**"mbtimE"** parameter in **"rS-485"** menu (maximum delay between received frames); **0** - no delay checking; **1** ÷ **99** - maximum delay expressed in seconds
2Dh	Yes	1 ÷ 8	"**briGHt**" parameter (display brightness); **1** - the lowest brightness; **8** - the highest brightness
2Fh	Yes	0 ÷ 1	"**Edit**" parameter (numerical parameters edit mode); **0** - „**dig**" mode; **1** - „**SLid**" mode
30h[6]	Yes	see descr.	**"SEtP 1"** parameter in **"rELAy 1"** menu (high word).
31h[6]	Yes	see descr.	**"SEtP 1"** parameter in **"rELAy 1"** menu (low word). Cumulative value of registers 30h and 31h: from -99999 to 999999
32h	Yes	0÷3	"**modE 1**" parameter in "**rELAy 1**" menu: **0** - "**noAct**" mode; **1** - "**on**" mode; **2** - "**oFF**" mode; **3** - "**modbuS**" mode
33h	Yes	0÷999	**"timE 1"** parameter in **"rELAy 1"** menu (the time period of the relay ***active state***), expressed in tenth of seconds or tenth of minutes (depending on **"unit"** parameter);
34h	Yes	0 ÷ 1	**"unit 1"** parameter in **"rELAy 1"** menu: **0** - "**SEC**" option; **1** - "**min**" option

Register	*Write*	*Range*	*Register description*
38h[6]	Yes	see descr.	**"SEtP 2"** parameter in **"rELAy 2"** menu (high word).
39h[6]	Yes	see descr.	**"SEtP 2"** parameter in **"rELAy 2"** menu (low word). Cumulative value of registers 38h and 39h: from -99999 to 999999
3Ah	Yes	0÷3	"**modE 2**" parameter in "**rELAy 2**" menu: **0** - "**noAct**" mode; **1** - "**on**" mode; **2** - "**oFF**" mode; **3** - "**modbuS**" mode
3Bh	Yes	0÷999	**"timE 2"** parameter in **"rELAy 2"** menu (the time period of the relay ***active state***), expressed in tenth of seconds or tenth of minutes (depending on **"unit"** parameter);
3Ch	Yes	0 ÷ 1	**"unit 2"** parameter in **"rELAy 2"** menu: **0** - "**SEC**" option; **1** - "**min**" option
3Dh	Yes	0 ÷ 1	**rEF 2"** parameter in **"rELAy 2"** menu: **0** - **"Std"** option; **1** - **"rELPr1"** option

1 - if overflow or underflow occurs (**"-Hi-"** or **"-Lo-"**), read of registers 01h and 02h (single registers) it returns recalculated number of pulses (while the overload of display quantity is very big this value can be erroneous). Register 03h returns according error code.

2 - Preset of 0000h to these registers (04h, 05h, 06h and 07h,) causes by zeroing of main counter and precounter content

3 - after writing to register no 20h the device responds with an "old" address in the message.

4 - after writing to register no 22h the device responds with the new baud rate.

5 - the value of the "**mbAccE**" parameter is also connected to write to this register, so it is possible to block a writes, but impossible to unblock writes via RS-485 interface, The unblocking of the writes is possible from menu level only.

6 - numbers written to holding registers of relays thresholds are interrelated with each other auto-correction. For example. Preset to reg. 31h (threshold lower word) of value, which together with content of register 30h (threshold higher word) gets value from behind of allowable range, will fails. Over more preset to reg 30h of value which together with content of register 31h gets value from behind of allowable range, will modify the content of register 31h, in that way to it's value together with register 30h be located in allowable range. If appropriate modification is impossible, write fails. It is recommended to write threshold values in presented manner: first preset of threshold higher word, and next threshold lower word. Similarly storing of thresholds registers of another relays is being realised with each other correction.

9.2. TRANSMISSION ERRORS DESCRIPTION

If an error occurs while write or read of single register, then the device sends an error code according to Modbus RTU specifications.

Error codes:
01h - illegal function (only functions 03h, 06h and 10h are available),
02h - illegal register address
03h - illegal data value
08h - no write permission (see: "**mbAccE**" parameter)

9.3. EXAMPLES OF QUERY/ANSWER FRAMES

Examples apply for device with address 1. All values are represent hexadecimal.

Field description:

ADDR	Device address on Modbus network
FUNC	Function code
REG H,L	Starting address (address of first register to read/write, Hi and Lo byte)
COUNT H,L	No. of registers to read/write (Hi and Lo byte)

BYTE C Data byte count in answer frame
DATA H,L Data byte (Hi and Lo byte)
CRC L,H CRC error check (Hi and Lo byte)

1. Read of device ID code

ADDR	FUNC	REG H,L		COUNT H,L		CRC L,H	
01	03	00	21	00	01	D4	00

The answer:

ADDR	FUNC	BYTE C	DATA H,L		CRC L,H	
01	03	02	20	C5	61	D7

DATA - identification code (20C5h)

2. Change of the device address from 1 to 2 (write to reg. 20h)

ADDR	FUNC	REG H,L		DATA H,L		CRC L,H	
01	06	00	20	00	02	09	C1

DATA H - 0
DATA L - new device address (2)

The answer (the same as the message):

ADDR	FUNC	REG H,L		DATA H,L		CRC L,H	
01	06	00	20	00	02	09	C1

3. Change of baud rate of all devices connected to the net (BROADCAST message).

ADDR	FUNC	REG H,L		COUNT H,L		CRC L,H	
00	06	00	22	00	04	29	D2

DATA H - 0
DATA L - 4, new baud rate 19200 baud

Device do not reply to BROADCAST-type messages.

4. Read of the displayed value (higher word):

ADDR	FUNC	REG H,L		COUNT H,L		CRC L,H	
01	03	00	01	00	01	D5	CA

Response, while normal operation (no errors):

ADDR	FUNC	BYTE C	DATA H,L		CRC L,H	
01	03	02	00	00	B8	4C

DATA H, L - 0000h = 0, higher word of displayed value = 00

5. Read of the displayed value (high and low word),

ADDR	FUNC	REG H,L		COUNT H,L		CRC L,H	
01	03	00	01	00	02	95	CB

Response, while normal operation (no errors):

ADDR	FUNC	BYTE C	DATA H1,L1		DATA H2,L2		CRC L,H	
01	03	04	00	00	00	57	BB	CD

DATA - 00000057h = 87, displayed value = 87

6. Settings of the programmable inputs parameters, “Pr InP”=”inhibi”

ADDR	FUNC	REG H,L		DATA H,L		CRC L,H	
01	06	00	11	00	01	18	0F

The answer (the same as the message):

ADDR	FUNC	REG H,L		DATA H,L		CRC L,H	
01	06	00	11	00	01	18	0F

7. Try to write illegal data value into baud rate register

ADDR	FUNC	REG H,L		DATA H,L		CRC L,H	
01	06	00	22	00	09	E9	C6

DATA L = 9 - value exceeds allowable range (0÷7)

The answer (exception code 03h - illegal data value):

ADDR	FUNC	ERR	CRC L,H	
01	86	03	02	61

There is no full implementation of the Modbus Protocol in the device. The functions presented above are available only.

10. DEFAULT AND USER'S SETTINGS LIST

Parameter	*Description*	*Default value*	*User's value*	*Desc. page*
Parameters of relay R1 operation ("rELAy1" menu)				
SEtP 1	Relay threshold	100		24
modE 1	Operation mode of relay	on		24
timE 1	The time period of the relay *active state*	0.0		25
unit 1	Unit of **"timE"** parameter	SEC		25
Parameters of relay R2 operation ("rELAy2" menu)				
SEtP 2	Relay threshold	500		24
modE 2	Operation mode of relay	on		24
timE 2	The time period of the relay *active state*	0.0		25
unit 2	Unit of **"timE"** parameter	SEC		25
rEF 2	Reference value (offset) of the relay threshold	Std		25
Configuration of parameters update method				
PArUPd	Parameters update method	immEd		27
Settings of programmable input, zeroing, filtering, and counting mode				
Pr inP	Programmable input function	diSAbL		26
rESEt	Clearing (zeroing) source of main counter	ALL		26
ArESEt	Autoreset function	oFF		26
FiLtEr	Digital filtration rate	0		27
Funct	Counting mode	quAd-1		25
Prescaler settings (menu "PrESCA")				
muL	multiplier	1		27
div	divider	1		27
oFFSEt	Offset - constant value added to the result to move the zero point of the current scale	0		27
Point	Decimal point position	0.00		28
RS 485 interface configuration ("rS-485" menu)				
Addr	Device address	0		28
bAud	Baud rate	9600		28
mbAccE	Permission to changes of configuration registers	on		28
mbtimE	Maximum delay between received messages	0		28
rESP	Additional delay of answer transmission	Std		29
Settings of access to the configuration parameters ("SECu" menu)				

Parameter	*Description*	*Default value*	*User's value*	*Desc. page*
A rEL1	Permission to changes of relay R1 threshold without of the user password knowledge	oFF		29
A rEL2	Permission to changes of relay R2 threshold without of the user password knowledge	oFF		29
Display parameters				
briGHt	Display brightness	bri6		31
Configuration of numerical parameters edition				
Edit	Numerical parameters edit mode	dig		31

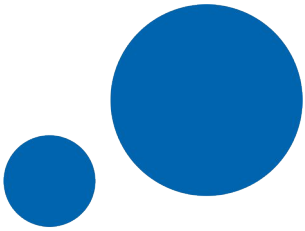

SIMEX Sp. z o.o.
ul. Wielopole 11
80-556 Gdańsk
Poland

tel.: (+48 58) 762-07-77
fax: (+48 58) 762-07-70

http://www.simex.pl
e-mail: info@simex.pl