THE INFORMATION CONTAINED IN THIS DRAWING IS THE SOLE PROPERTY OF L-COM, INC. ANY REPRODUCTION IN PART OR WHOLE WITHOUT THE WRITTEN PERMISSION OF L-COM, INC. IS PROHIBITED.

REVISIONS			
REV	DESCRIPTION	DATE	APPROVED
A	INITIAL RELEASE	09/14/2020	D.GUTTADAURO

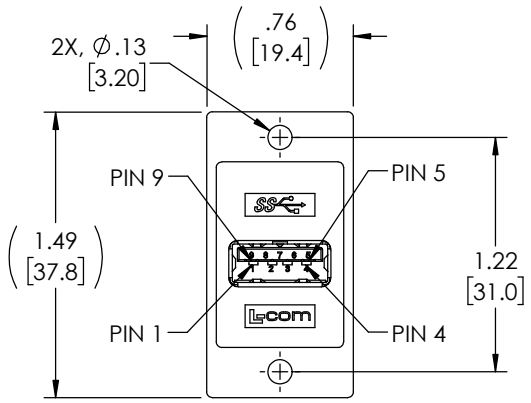

"J1"
USB 3.0 TYPE "A"
FEMALE CONNECTOR
30u" GOLD PLATED CONTACTS
NICKEL PLATED SHELL

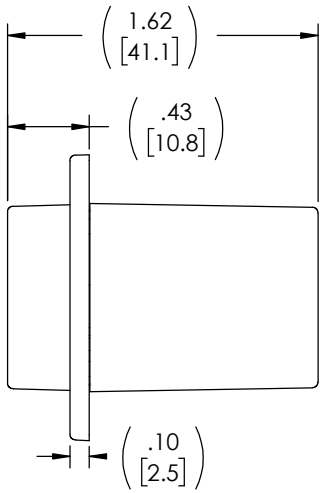

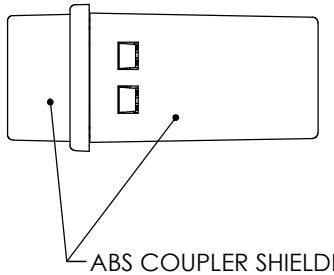

ABS COUPLER SHIELDED HOUSING,
FINISH: CHROME

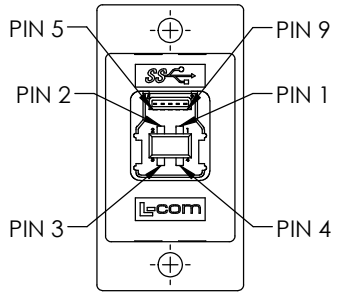

"J2"
USB 3.0 TYPE "B"
FEMALE CONNECTOR
30u" GOLD PLATED CONTACTS
NICKEL PLATED SHELL

WIRING MAP

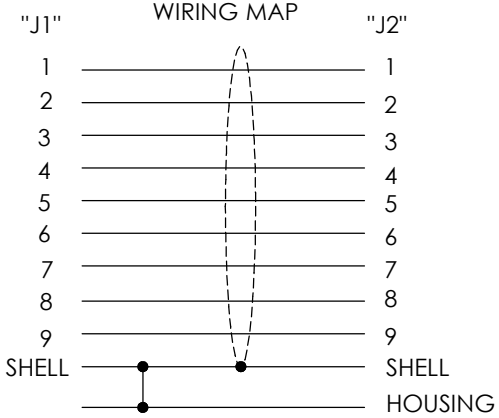

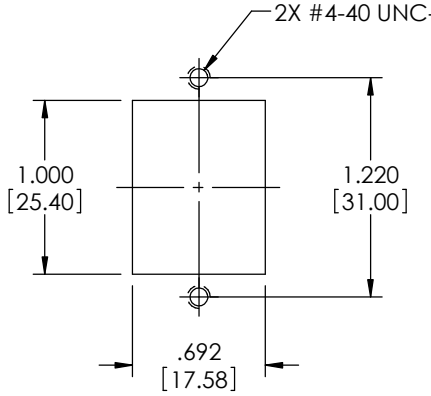

RECOMMENDED
PANEL CUTOUT

NOTES:

1. RATING:
   CURRENT: 1.8A (P1 & P4 CONTACTS); 0.25A(OTHER CONTACTS)
   VOLTAGE: 30V max.
   OPERATING TEMPERATURE: -10°C TO +70°C.
2. COUPLER SHALL BE TESTED FOR CONTINUITY.
3. COUPLER SHALL BE INDIVIDUALLY PACKAGED IN ACCORDANCE WITH L-COM PACKAGING SPEC PS-0031.

UNLESS OTHERWISE SPECIFIED, DIMENSIONS ARE IN INCHES [mm]
OVERALL CABLE LENGTH TOLERANCE:
≤12 [305] = +1 [25] / -0
>12 [305] ≤60 [1524] = +2 [51] / -0
>60 [1524] ≤120 [3048] = +4 [102] / -0
>120 [3048] ≤300 [7620] = +6 [152] / -0
>300 [7620] = +5% / -0
ALL OTHER DIMENSIONAL TOLERANCES:
.X = ± .2 [5] | FRACTIONS ± 1/32
.XX = ± .02 [.5] | ANGLES ± 1°
.XXX = ± .005 [.13]
THIRD-ANGLE PROJECTION

APPROVALS		DATE
DRAWN BY	B.ZHANG	08/19/2020
CHECKED BY	D.CONTROL	08/19/2020
APPROVED BY	D.GUTTADAURO	08/19/2020

CONFIGURATION DETAILS OF UNDIMENSIONED FEATURES MAY VARY

COLOR VARIATIONS MAY OCCUR

L-COM an INFINITE brand
50 High Street, West Mill,
North Andover, MA 01845 USA.
Phone: 1.800.341.5266
1.978.682.6936

CATEGORY
USB

PRODUCT DESCRIPTION
USB3.0 COUPLER PNL MNT AF-BF SHIELDED

SIZE	CAGE CODE	DWG. NO.	REV.
A	43321	ECF504-3AB-S	A

SCALE: NONE | CAD FILE: ECF504-3AB-S.SLDDRW | SHEET 1 OF 1