Lovato

Pushbutton actuators, spring return



LPC B10...

Flush (without mounting adapter).

LPC B102	Black
LPC B103	Green
LPC B104	Red
LPC B105	Yellow
LPC B106	Blue
LPC B108	White

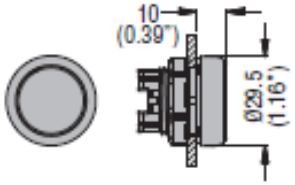

Flush
LPC B1...

Flush pushbutton with contact elements or lamp-holder

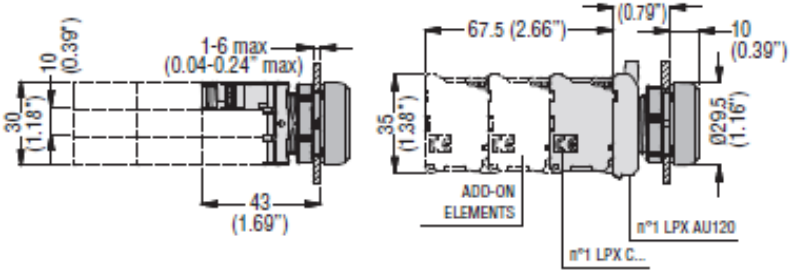

Drilling - Minimum recommended distances

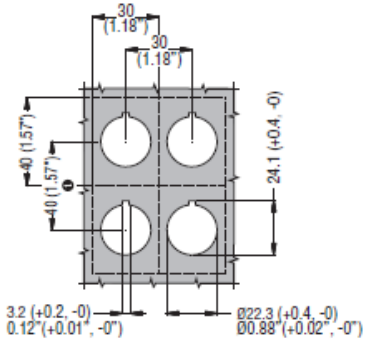

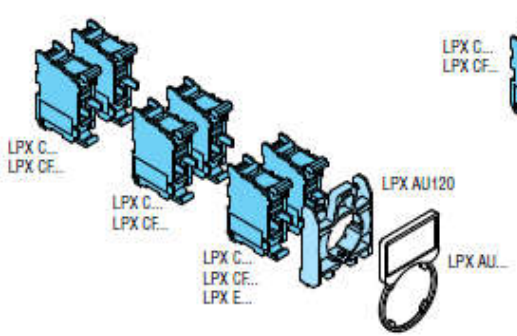

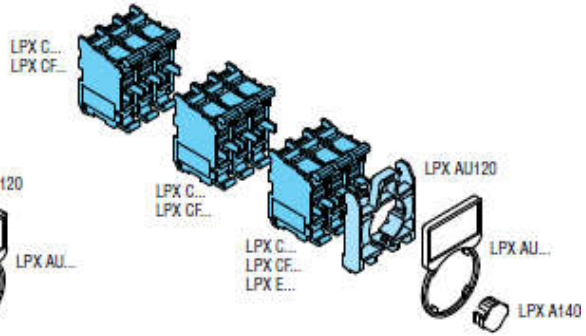

Operational characteristics

- Ambient conditions:
  - Operating temperature: -25...+70°C
  - Storage temperature: -40...+85°C
- Any mounting position is allowed.
- Degree of protection:
  - Per IEC/EN: IP66, IP67 and IP69K
  - Per UL: type 1, 2, 3R, 4, 4X, 12, 12K.

Materials

Polyamide.

Mechanical endurance

Operating force: <0.5kg / 1.1lb (actuator).
Mechanical life: 5,000,000 cycles.

Mounting adapter

Type: LPX AU120.
Actuators are installed through a Ø22mm/Ø0.89in drilling with a threaded fixing ring (Tmax = 2.3Nm / 1.69lbft).
The mounting adapter directly snaps onto the actuator.

Contact elements

Type: LPX C10 (1NO)
LPX CF10 (1NO Faston)
LPX C10A (1EM)
LPX C01 (1NC)
LPX CF01 (1NC Faston)
LPX C01D (1LB)

Contact elements snap onto the mounting adapter.
Up to 9 contact elements can be fitted on the mounting adapter: 3 on the left, 3 at the centre and 3 on the right; one on top of the other.
To mount contact elements in the centre position, use the accessory: LPX A140; see page 7-17.

Certifications and compliance

Certifications obtained: UL Listed, for USA and Canada, (File E93601), as Auxiliary Devices.
Certifications pending at time of catalogue printing: CCC.
Compliant with standards: IEC/EN 60947-1, IEC/EN 60947-5-1, UL508, CSA C22.2 n° 14.