TI01526C/07/EN/01.20
71515203
2021-01-31

Technical Information
Memosens CLS15E

Digital conductivity sensor with Memosens 2.0 technology



Cell constant k = 0.01 cm^{-1} or k = 0.1 cm^{-1}

Application

Measurements in pure and ultrapure water

Typical applications include:
- Monitoring of ion exchangers
- Reverse osmosis
- Distillation
- Chip cleaning

Sensors with temperature probes are used in conjunction with conductivity measuring devices that support automatic temperature compensation:
- Liquiline CM442/CM444/CM448
- Liquiline CM42
- Liquiline CM14

The resistivity in MΩ · cm can also be measured using these transmitters.

Your benefits

- High measuring accuracy as cell constant is individually measured
- Manufacturer inspection certificate stating the individual cell constant
- Installation in pipe or flow assembly
- Compact design
- Easy to clean thanks to polished surfaces
- Can be sterilized up to 140 °C (284 °F)
- Inspection certificate EN 10204 3.1 (optional)

Other advantages provided by Memosens technology

- Maximum process safety
- Data security thanks to digital data transmission
- Very easy to use as sensor data are saved in the sensor
- Predictive maintenance can be performed by recording sensor load data in the sensor

Endress+Hauser
People for Process Automation

Table of contents

Function and system design 3
Measuring principle 3
Measuring system 3

Communication and data processing 4

Dependability 4
Reliability 4
Maintainability 4
Integrity 4

Input 5
Measured variables 5
Measuring ranges 5
Cell constant 5
Temperature compensation 5

Power supply 5
Electrical connection 5

Performance characteristics 5
Uncertainty of measurement 5
Response time 5
Measured error 5
Repeatability 5

Installation 6
Installation instructions 6

Environment 6
Ambient temperature 6
Storage temperature 6
Degree of protection 6

Process 6
Process temperature 6
Process pressure 6
Temperature/pressure ratings 7

Mechanical construction 7
Design 7
Dimensions in mm (in) 8
Weight 8
Materials (in contact with medium) 8
Materials (not in contact with medium) 8
Process connection 8
Surface roughness 8

Certificates and approvals 8
CE mark 8
Hazardous area approvals 8
Test reports 9
Additional certification 9
Other standards and guidelines 9

Ordering information 9
Product page 9
Product Configurator 9
Scope of delivery 9

Accessories 9
Threaded and adapter couplings 9
Flow assembly 10
Measuring cable 10
Calibration solutions 10
Calibration set 10

Function and system design

Measuring principle

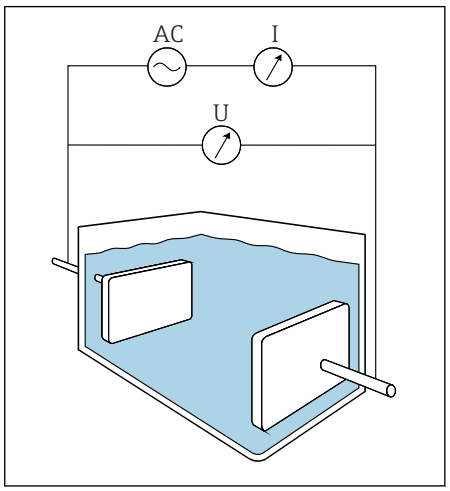

1 *Conductive measurement of conductivity*

AC Alternating voltage source
I Current intensity measurement
U Voltage measurement

Conductivity of liquids is determined with a measuring arrangement where two electrodes are located in the medium. An alternating voltage that causes a current to flow through the medium is applied at these electrodes. The electrical resistance, or its reciprocal value - conductance G - is calculated based on Ohm's law. The specific conductance κ is determined from the conductance value using the cell constant k, which depends on the sensor geometry.

Measuring system

A complete measuring system comprises at least:
- Conductivity sensor Memosens CLS15E
- Transmitter, e.g. Liquiline M CM42
- Measuring cable, e.g. Memosens data cable CYK10

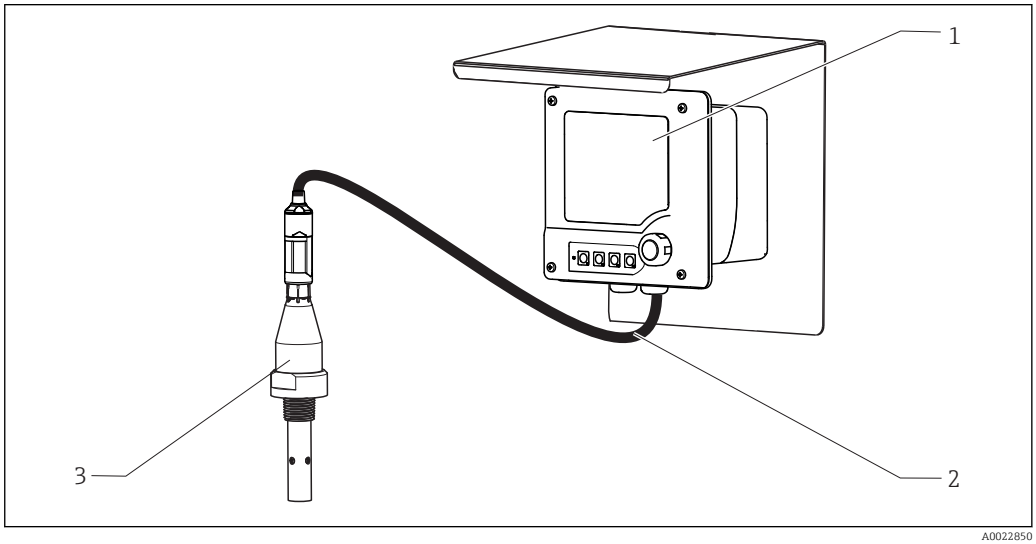

2 *Example of a measuring system (with Memosens sensor)*

1 Liquiline M CM42 transmitter
2 Memosens data cable
3 Memosens CLS15E

Communication and data processing

Communication with the transmitter

Always connect digital sensors with Memosens technology to a transmitter with Memosens technology. Data transmission to a transmitter for analog sensors is not possible.

Digital sensors can store measuring system data in the sensor. These include the following:
- Manufacturer data
  - Serial number
  - Order code
  - Date of manufacture
- Calibration data
  - Calibration date
  - Cell constant
  - Delta cell constant
  - Number of calibrations
  - Serial number of the transmitter used to perform the last calibration or adjustment
- Operating data
  - Temperature application range
  - Conductivity application range
  - Date of initial commissioning
  - Maximum temperature value
  - Hours of operation at high temperatures

Dependability

Reliability

Memosens technology digitizes the measured values in the sensor and transmits the data to the transmitter via a . The result:
- If the sensor fails or there is an interruption in the connection between the sensor and transmitter, this is reliably detected and reported.
- The availability of the measuring point is reliably detected and reported.

Maintainability

Easy handling
Sensors with Memosens technology have integrated electronics that store calibration data and other information (e.g. total hours of operation or operating hours under extreme measuring conditions). Once the sensor has been connected, the sensor data are transferred automatically to the transmitter and used to calculate the current measured value. As the calibration data are stored in the sensor, the sensor can be calibrated and adjusted independently of the measuring point. The result:
- Easy calibration in the measuring lab under optimum external conditions increases the quality of the calibration.
- Pre-calibrated sensors can be replaced quickly and easily, resulting in a dramatic increase in the availability of the measuring point.
- Thanks to the availability of the sensor data, maintenance intervals can be accurately defined and predictive maintenance is possible.
- The sensor history can be documented with external data carriers and evaluation programs.
- Thus, the current application of the sensors can be made to depend on their previous history.

Integrity

With inductive transmission of the measured value using a non-contact connection, Memosens guarantees maximum process safety and offers the following benefits:
- All problems caused by moisture are eliminated.
  - Plug-in connection remains free from corrosion
  - Measured value distortion from moisture is not possible.
  - The plug-in system can even be connected under water.
- The transmitter is galvanically decoupled from the medium.
- EMC safety is guaranteed by screening measures for the digital transmission of measured values.

Input

Measured variables

- Conductivity
- Temperature

Measuring ranges

Conductivity [1]

CLS15E-******A	40 nS/cm to 20 µS/cm
CLS15E-******B	100 nS/cm to 200 µS/cm

1) In relation to water at 25 °C (77 °F)

Temperature -20 to 140 °C (-4 to 284 °F)

Cell constant

CLS15E-******A	k = 0.01 cm^{-1}
CLS15E-******B	k = 0.1 cm^{-1}

Temperature compensation Pt1000 (Class A according to IEC 60751)

Power supply

Electrical connection

The electrical connection of the sensor to the transmitter is established using the measuring cable CYK10.

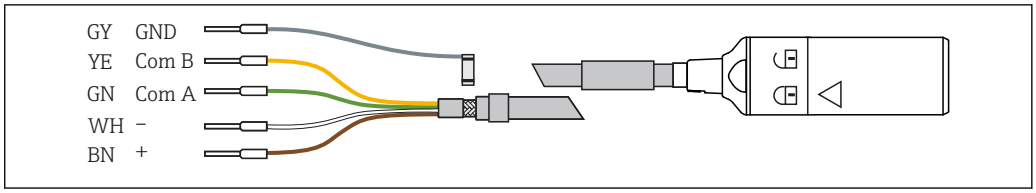

3 Measuring cable CYK10

Performance characteristics

Uncertainty of measurement

Each individual sensor is factory-measured in a solution with approx. 5 µS/cm for cell constant 0.01 cm^{-1} or approx. 50 µS/cm for cell constant 0.1 cm^{-1} using a reference measuring system traceable to NIST or PTB. The exact cell constant is entered into the manufacturer inspection certificate supplied. The uncertainty of measurement in determining the cell constant is 1.0 %.

Response time

Conductivity	$t_{95} \leq 2$ s
Temperature [1]	
CLS15E-******A:	$t_{90} \leq 16$ s [2]
CLS15E-******B:	$t_{90} \leq 8$ s [2]

1) DIN VDI/VDE 3522-2 (0.3 m/s laminar)
2) With temperature prediction activated as standard

Measured error

Conductivity	≤ 2 % of reading, in specified measuring range
Temperature	≤ 0.5 K, in measuring range -5 to 100 °C (23 to 212 °F) ≤ 1.0 K, in measuring range 100 to 140 °C (212 to 284 °F)

Repeatability

Conductivity	≤ 0.2 % of reading, in specified measuring range
Temperature	≤ 0.05 K

Installation

Installation instructions

The sensors are installed directly via the process connection, e.g. Clamp.

As an option, the sensor can also be installed using a commercially available T-piece or cross fitting or using a flow assembly.

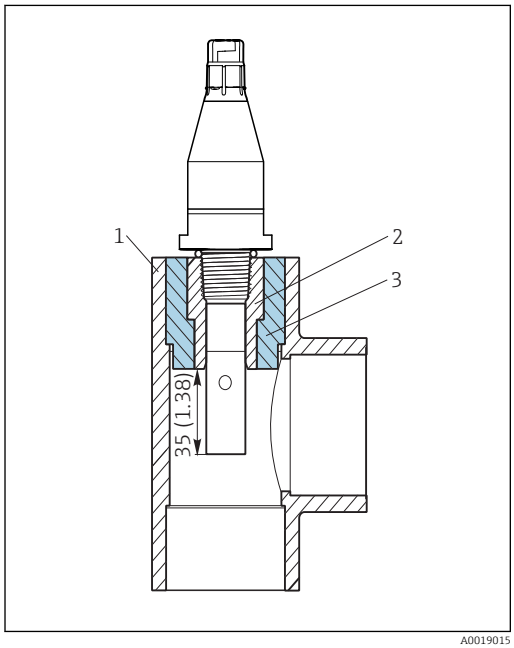

4 With NPT ½" thread in T-piece or cross fitting

1 T-piece or cross fitting (DN 32, 40 or 50)
2 Glue-in VC threaded coupling (NPT ½" for DN 20, see "Accessories")
3 Glue-in adapter coupling (for DN 32, 40, 50, see "Accessories")

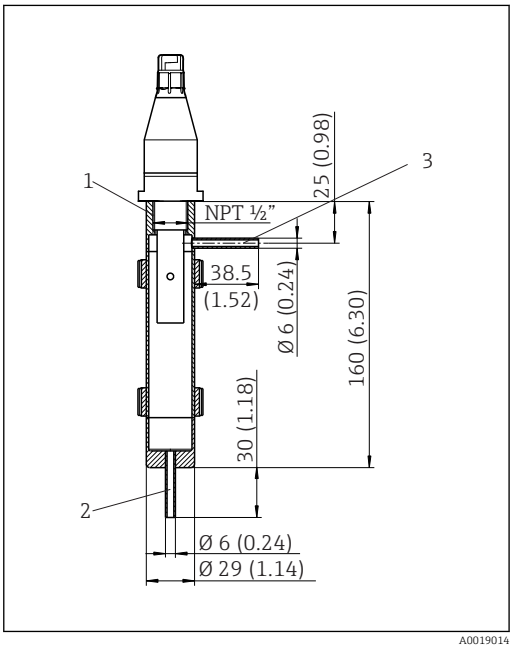

5 With NPT ½" thread in flow assembly 71042405, dimensions in mm (inch)

1 Sensor holder NPT ½"
2 Inlet
3 Outlet

Environment

Ambient temperature

−20 to 60 °C (−4 to 140 °F)

Storage temperature

-25 to +80 °C (-10 to +180 °F)

Degree of protection

IP 68 / NEMA type 6P (1 m water column, 25 °C, 24 h)

Process

Process temperature

Normal operation	-20 to 120 °C (-4 to 248 °F)
Sterilization (max. 1 h) [1]	Max. 140 °C (284 °F)

1) Threaded versions: max. 30 minutes

Process pressure

13 bar (188 psi) absolute, at 20 °C (68 °F)
2 bar (29 psi) absolute, at 120 °C (248 °F)

Temperature/pressure ratings

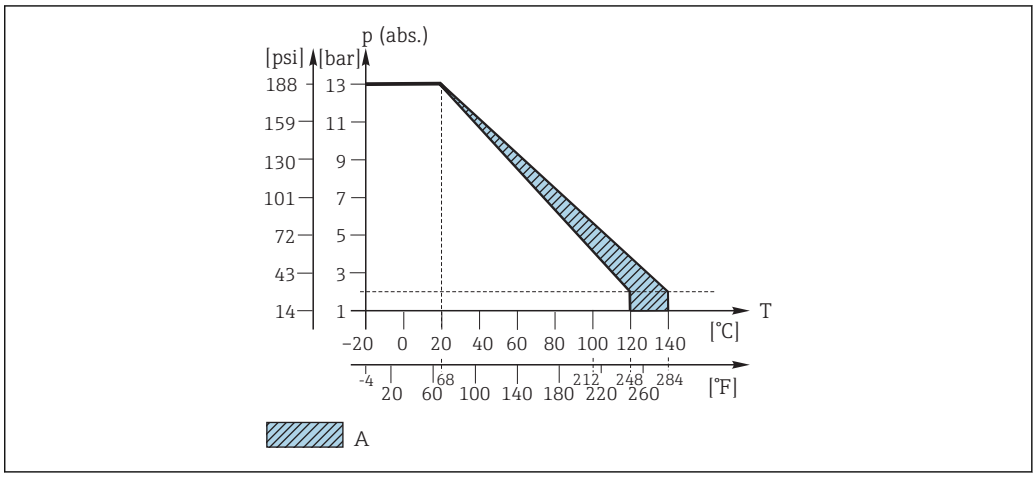

6 *Mechanical pressure-temperature resistance*

A Can be sterilized for a short time (1 hour)

Mechanical construction

Design

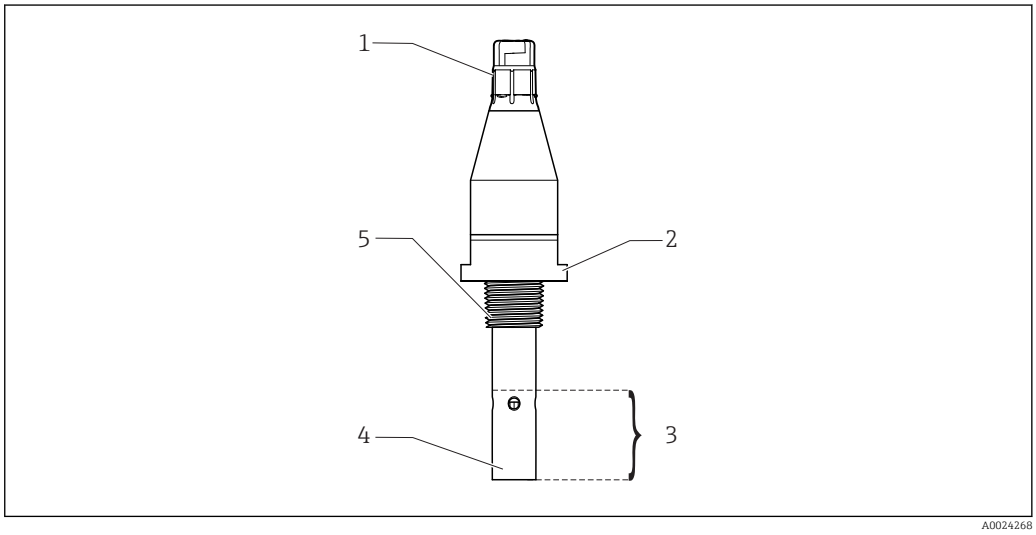

7 *Sensor*

1 Memosens plug-in head
2 Wrench flats for mounting
3 Minimum immersion depth
4 Coaxial measuring electrodes
5 Process connection (thread, clamp)

Dimensions in mm (in)

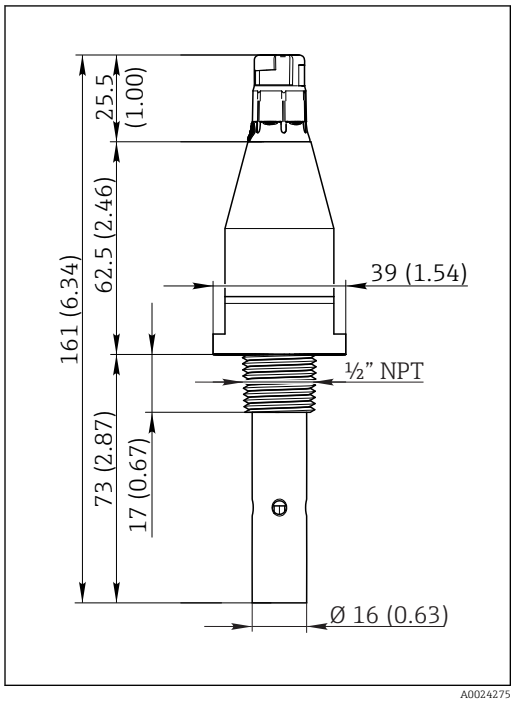

8 *Version with thread*

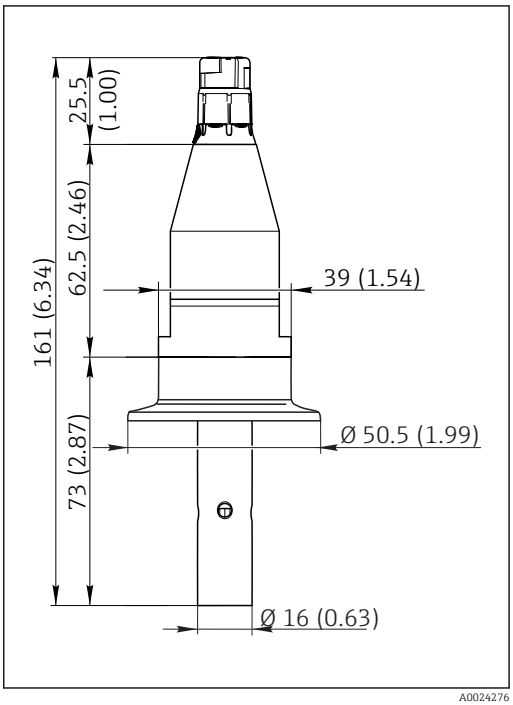

9 *Version with Clamp*

Weight

Approx. 0.3 kg (0.66 lbs) depending on version

Materials (in contact with medium)

Electrodes	Polished, stainless steel 1.4435 (AISI 316L)
Sensor shaft	Polyethersulfone (PES-GF20)
O-ring, in contact with medium (only Clamp version)	EPDM

Materials (not in contact with medium)

Information according to REACH Regulation (EC) 1907/2006 Art. 33/1)
An internal connector contains the SVHC substance lead (CAS number 7439-92-1) with over 0.1 % (w/w).
The product does not present a hazard if it is used as designated.

Process connection

Thread NPT ½" and ¾"
Clamp 1½" as per ISO 2852

Surface roughness

$R_a \leq 0.8$ µm

Certificates and approvals

Certificates and approvals are optional, i.e. they depend on the product version.

CE mark

EU Declaration of Conformity

The product meets the requirements of the harmonized European standards. As such, it complies with the legal specifications of the EU directives. The manufacturer confirms successful testing of the product by affixing to it the CE mark.

Hazardous area approvals

CLS15E-BA
II 1 G Ex ia IIC T3/T4/T6 Ga

CLS15E-CI
CSA C/US IS Cl. I Div. 1 GP A-D
T3/T4/T6 + CSA C/US IS Cl. I Zone 0
AEx ia IIC T3/T4/T6

CLS15E-GA
EAC Ex, 0Ex ia IIC T3/T4/T6 Ga X

CLS15E-IA
Ex ia IIC T3/T4/T6 Ga

CLS15E-NA
NEPSI Ex ia IIC T3/T4/T6 Ga

Test reports

Manufacturer inspection certificate

Stating the individual cell constant

Additional certification

Inspection certificate in accordance with EN 10204 3.1

A test certificate 3.1 in accordance with EN 10204 is supplied depending on the version (→ Product Configurator on the product page).

Other standards and guidelines

EAC

The product has been certified according to guidelines TP TC 004/2011 and TP TC 020/2011 which apply in the European Economic Area (EEA). The EAC conformity mark is affixed to the product.

Ordering information

Product page

www.endress.com/cls15e

Product Configurator

On the product page there is a **Configure** button to the right of the product image.

1. Click this button.
   ↳ The Configurator opens in a separate window.
2. Select all the options to configure the device in line with your requirements.
   ↳ In this way, you receive a valid and complete order code for the device.
3. Export the order code as a PDF or Excel file. To do so, click the appropriate button on the right above the selection window.

For many products you also have the option of downloading CAD or 2D drawings of the selected product version. Click the **CAD** tab for this and select the desired file type using picklists.

Scope of delivery

The scope of delivery includes:
- Sensor in the version ordered
- Operating Instructions

Accessories

The following are the most important accessories available at the time this documentation was issued.

► For accessories not listed here, please contact your Service or Sales Center.

Threaded and adapter couplings

For sensors with NPT ½" process connection /

PVC threaded coupling
- For gluing into commercially available PVC cross fittings or T-pieces with DN 20
- With G½ internal thread, self-sealing with NPT ½" sensor thread
- Order No. 50066536

PVDF threaded coupling
- With G½ internal thread and G1 external thread
- Explosion-proof up to 12 bar at 20 °C (174 psi at 68 °F), max. 120 °C at 1 bar (248 °F at 14.5 psi), including O-ring
- Self-sealing internal thread with NPT ½" sensor thread
- Order No. 50004381

PVC adapter couplings AM
- For adapting the PVC threaded coupling to larger nominal diameters
- Diameter, order numbers:
  - AM 32: for cross-fittings or T-pieces DN 32, Order No. 50004738
  - AM 40: for cross-fittings or T-pieces DN 40, Order No. 50004739
  - AM 50: for cross-fittings or T-pieces DN 50, Order No. 50004740

Flow assembly

For installing conductivity sensors with NPT ½" thread
- Material: Stainless steel 1.4404 (AISI 316 L)
- Connections: 90°, Ø 6 mm (0.24")
- Volume: 0.69 l (0.18 US gal)
- Max. temperature: 100 °C (212 °F)
- Max. pressure: 16 bar (232 psi)
- Order No.: 71042405

Measuring cable

Memosens data cable CYK10
- For digital sensors with Memosens technology
- Product Configurator on the product page: www.endress.com/cyk10

Technical Information TI00118C

Memosens data cable CYK11
- Extension cable for digital sensors with Memosens protocol
- Product Configurator on the product page: www.endress.com/cyk11

Technical Information TI00118C

Calibration solutions

Conductivity calibration solutions CLY11

Precision solutions referenced to SRM (Standard Reference Material) by NIST for qualified calibration of conductivity measuring systems in accordance with ISO 9000
- CLY11-A, 74 µS/cm (reference temperature 25 °C (77 °F)), 500 ml (16.9 fl.oz)
  Order No. 50081902
- CLY11-B, 149.6 µS/cm (reference temperature 25 °C (77 °F)), 500 ml (16.9 fl.oz)
  Order No. 50081903

Technical Information TI00162C

Calibration set

Conducal CLY421
- Conductivity calibration set (case) for ultrapure water applications
- Complete, factory-calibrated measuring system with certificate, traceable to SRM by NIST and PTB, for comparison measurement in ultrapure water up to max. 20 µS/cm
- Product Configurator on the product page: www.endress.com/cly421

Technical Information TI00496C/07/EN



www.addresses.endress.com

Endress+Hauser

People for Process Automation