BF80T2A12060

FOUR-POLE CONTACTOR, IEC OPERATING CURRENT ITH (AC1) = 115A, AC COIL 60HZ, 120VAC



Product designation			Power contactor
Product type designation			BF80
Contact characteristics			
Number of poles		Nr.	4
Rated insulation voltage Ui IEC/EN		V	1000
Rated impulse withstand voltage Uimp		kV	8
Operational frequency			
	min	Hz	25
	max	Hz	400
IEC Conventional free air thermal current Ith		A	115
Operational current Ie			
	AC-1 (≤40°C)	A	115
	AC-1 (≤55°C)	A	95
	AC-1 (≤70°C)	A	80
	AC-3 (≤440V ≤55°C)	A	80
	AC-4 (400V)	A	38
Rated operational power AC-1 (T≤40°C)			
	230V	kW	43
	400V	kW	76
	500V	kW	95
	690V	kW	120
Short-time allowable current for 10s (IEC/EN60947-1)		A	640
Protection fuse			
	gG (IEC)	A	125
	aM (IEC)	A	80
Making capacity (RMS value)		A	800
Breaking capacity at voltage			
	440V	A	640
	500V	A	625
	690V	A	456
Resistance per pole (average value)		mΩ	0.6
Power dissipation per pole (average value)			
	Ith	W	7.9
	AC3	W	3.8
Tightening torque for terminals			
	min	Nm	4
	max	Nm	5
	min	Ibin	2.95
	max	Ibin	3.69
Tightening torque for coil terminal			
	min	Nm	0.8
	max	Nm	1
	min	Ibin	0.8
	max	Ibin	0.74
Max number of wires simultaneously connectable		Nr.	2

The characteristics described in this document are subject to updates or modifications at any time. The descriptions, technical and functional information, illustrations and instructions in this brochure are purely illustrative, and are consequently not contractually binding

Conductor section				
	AWG/Kcmil			
		max		2
	Flexible w/o lug conductor section			
		min	mm²	1.5
		max	mm²	35
	Flexible c/w lug conductor section			
		min	mm²	1.5
		max	mm²	35
Power terminal protection according to IEC/EN 60529				IP20 front
Mechanical features				
Operating position				
		normal		Vertical plan
		allowable		±30°
Fixing				Screw / DIN rail 35mm
Weight			g	1360
Conductor section				
	AWG/kcmil conductor section			
		max		2
Operations				
Mechanical life			cycles	15000000
Electrical life			cycles	1300000
Safety related data				
Performance level B10d according to EN/ISO 13489-1				
		rated load	cycles	1300000
		mechanical load	cycles	15000000
Mirror contats according to IEC/EN 609474-4-1				YES
EMC compatibility				yes
AC coil operating				
Rated AC voltage at 60Hz			V	120
AC operating voltage				
	of 60Hz coil powered at 60Hz			
		pick-up		
			min	%Us 80
			max	%Us 110
		drop-out		
			min	%Us 20
			max	%Us 55
AC average coil consumption at 20°C				
	of 60Hz coil powered at 60Hz			
		in-rush	VA	210
		holding	VA	15
Dissipation at holding ≤20°C 50Hz			W	5
Max cycles frequency				
Mechanical operation			cycles/h	3600
Operating times				
Average time for Us control				
	in AC			
		Closing NO		
			min	ms 12
			max	ms 28
		Opening NO		

The characteristics described in this document are subject to updates or modifications at any time. The descriptions, technical and functional information, illustrations and instructions in this brochure are purely illustrative, and are consequently not contractually binding

			min	ms	8
			max	ms	22
		Closing NC			
			min	ms	11
			max	ms	29
		Opening NC			
			min	ms	6
			max	ms	14
	in DC				
		Closing NO			
			min	ms	40
			max	ms	85
		Opening NO			
			min	ms	20
			max	ms	55
UL technical data					
Full-load current (FLA) for three-phase AC motor					
			at 480V	A	77
			at 600V	A	77
Yielded mechanical performance					
	for three-phase AC motor				
			200/208V	HP	25
			220/230V	HP	30
			460/480V	HP	60
			575/600V	HP	75
General USE					
	Contactor				
			AC current	A	115
Ambient conditions					
Temperature					
	Operating temperature				
			min	°C	-50
			max	°C	70
	Storage temperature				
			min	°C	-60
			max	°C	80
Max altitude				m	3000
Resistance & Protection					
Pollution degree					3
Dimensions					

The characteristics described in this document are subject to updates or modifications at any time. The descriptions, technical and functional information, illustrations and instructions in this brochure are purely illustrative, and are consequently not contractually binding

BF80T2A12060

FOUR-POLE CONTACTOR, IEC OPERATING CURRENT ITH (AC1) = 115A, AC COIL 60HZ, 120VAC

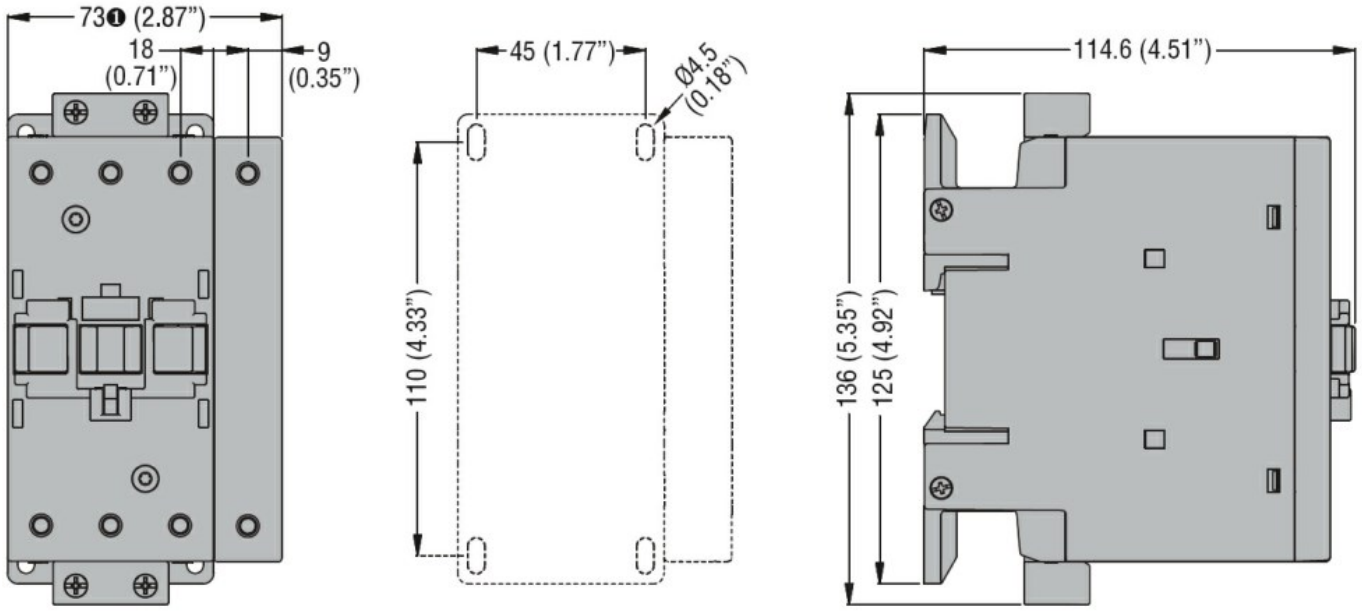

❶ BF80T2 82mm/3.23"

Wiring diagrams

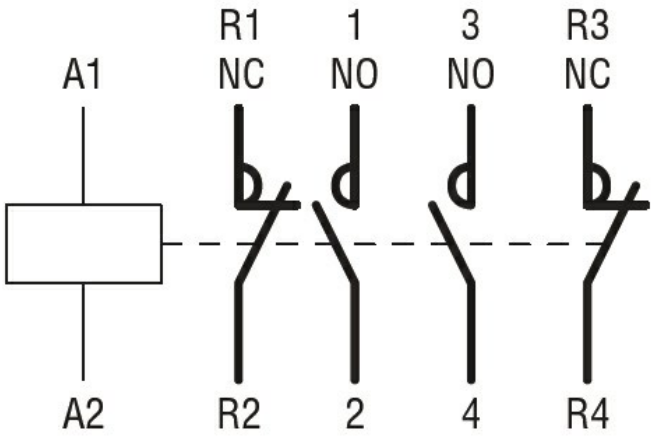

Certifications and compliance

Compliance

CSA C22.2 n° 60947-1
CSA C22.2 n° 60947-4-1
IEC/EN/BS 60947-1
IEC/EN/BS 60947-4-1
UL 60947-1
UL 60947-4-1

Certificates

CCC
cULus

ETIM classification

ETIM 8.0	EC000066 - Power contactor, AC switching

The characteristics described in this document are subject to updates or modifications at any time. The descriptions, technical and functional information, illustrations and instructions in this brochure are purely illustrative, and are consequently not contractually binding