SWITCH MODULE

DCM 010 | DC 20 to 56 V



> High DC switching capacity
> Variety of applications
> Wide DC voltage range
> Simple connection

The switch module is used to control DC powered devices with high capacities in control and switch cabinets. It is controlled via an external potential-free contact (thermostat or hygrostat), which is connected between terminal 3 and 4. It must be ensured that the external contact is suitable to switch the required signal current without any problems.

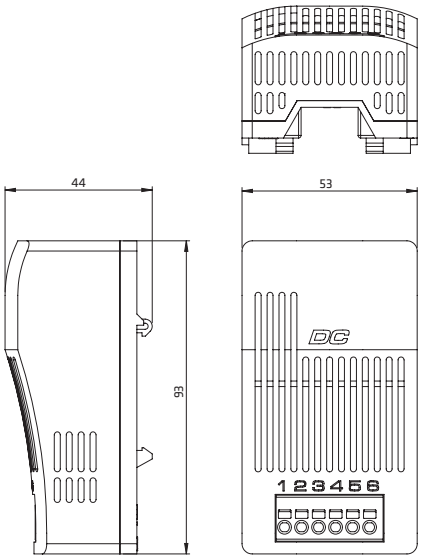

TECHNICAL DATA

Contact type	contact maker normally open (MOSFET)
Service life	> 100,000 cycles
Operating voltage	DC 20 to 56 V
Control contact – signal current	3 mA at DC 20 V / 4.5 mA at DC 24 V 14 mA at DC 48 V / 17 mA at DC 56 V
Connection	6-pole terminal: stranded wire[1] 1.5 mm² (AWG 16); max. 2.5 mm² (AWG 12)
Mounting	clip for 35 mm DIN rail, EN 60715
Casing	plastic according to UL94 V-0, grey (bicolor)
Dimensions	93 x 53 x 44 mm
Weight	approx. 65 g
Fitting position	vertical
Operating temperature	see article table below
Storage temperature	-40 to +80 °C (-40 to +176 °F)
Operating / Storage humidity	max. 90 % RH (non-condensing)
Protection type	IP20
Approvals	UL File No. E342261, VDE, EAC
Note	other versions on request

[1] When connecting with stranded wires, wire end ferrules must be used.

Connection diagram

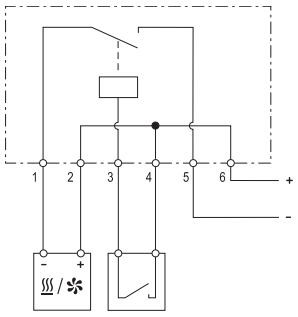

Example of connection

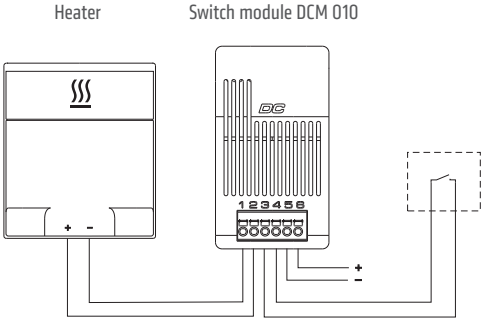

Art. No.	Max. switching capacity	Operating temperature
01010.0-00	DC 15 A	-30 to +40 °C (-22 to +104 °F)
01010.0-10	DC 13 A	-30 to +50 °C (-22 to +122 °F)
01010.0-20	DC 11 A	-30 to +60 °C (-22 to +140 °F)

www.stego.de | www.stego.co.uk | www.stegonorden.se

30.11.2017 | Specifications are subject to change without notice. Errors and omissions excepted. Suitability of this product for its intended use and any associated risks must be determined by the end customer/buyer in its final application.