Data sheet

Liquid level monitoring relay
CM-ENS.31

The CM-ENS.31 serves to regulate and control liquid levels and ratios of mixtures of conductive fluids. It can be used for overflow protection, dry running protection, filling or draining applications as well as max- and min- level alarming. To prevent accidental tripping due to wave formation in a tank, a selectable ON- or OFF-delay can be adjusted. Suitable electrodes are available as accessories.

The device is available with two different terminal versions. You can choose between the proven screw connection technology (double-chamber cage connection terminals) and the completely tool-free Easy Connect Technology (push-in terminals).



Characteristics

- Wide range power supply 24-240 V AC/DC
- Cascadable
- High EMC immunity
- Adjustable response sensitivity 0.1-1000 kΩ
- Control of one or two liquid levels (min/max)
- Fill (UP) or Drain (DOWN), adjustable via front-face potentiometer
- Selectable ON- or OFF-delay
- 2 c/o (SPDT) contacts
- 3 LEDs for the indication of operational states
- Screw connection technology or Easy Connect Technology available
- Housing material for highest fire protection classification UL 94 V-0
- Tool-free mounting and demounting on DIN rail
- 22.5 mm (0.89 in) width

Order data

Type	Rated control supply voltage	Output contacts	Connection technology	Order code
CM-ENS.31S	24-240 V AC/DC	2 c/o (SPDT) contacts	Screw connection	1SVR730850R0300
CM-ENS.31P			Push-in connection	1SVR740850R0300

Connection technology

Maintenance free Easy Connect Technology with push-in terminals

CM-ENS.31P

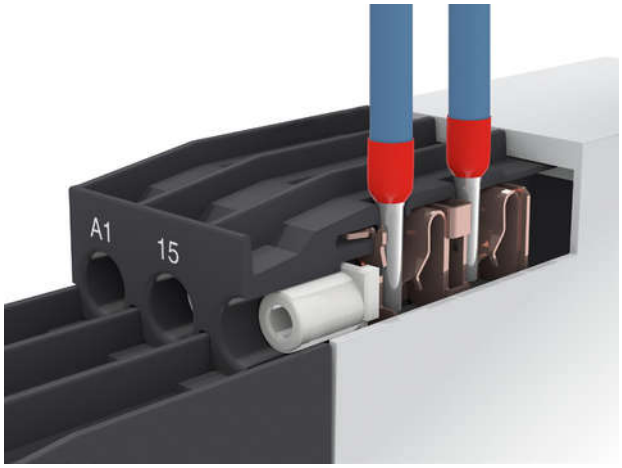

2CDC 253 026 F0011

Push-in terminals

- Tool-free connection of rigid and flexible wires with wire end ferrule
- Easy connection of flexible wires without wire end ferrule by opening the terminals
- No retightening necessary
- One operation lever for opening both connecting terminals
- For triggering the lever and disconnecting of wires you can use the same tool (Screwdriver according to DIN ISO 2380-1 Form A 0.8 x 4 mm (0.0315 x 0.157 in), DIN ISO 8764-1 PZ1 ø 4.5 mm (0.177 in))
- Constant spring force on terminal point independent of the applied wire type, wire size or ambient conditions (e. g. vibrations or temperature changes)
- Opening for testing the electrical contacting
- Gas-tight

Approved screw connection technology with double-chamber cage connection terminals

CM-ENS.31S

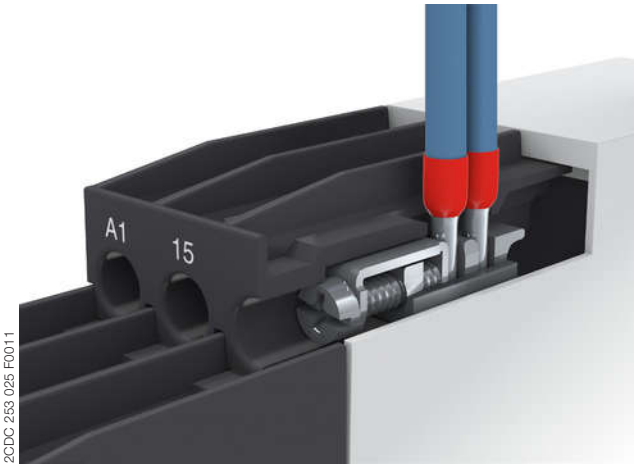

2CDC 253 025 F0011

Double-chamber cage connecting terminals

- Terminal spaces for different wire sizes
- One screw for opening and closing of both cages
- Pozidrive screws for pan- or crosshead screwdrivers according to DIN ISO 2380-1 Form A 0.8 x 4 mm (0.0315 x 0.157 in), DIN ISO 8764-1 PZ1 ø 4.5 mm (0.177 in)

Both the Easy Connect Technology with push-in terminals and screw connection technology with double-chamber cage connection terminals have the same connection geometry as well as terminal position.

Functions

Operating controls

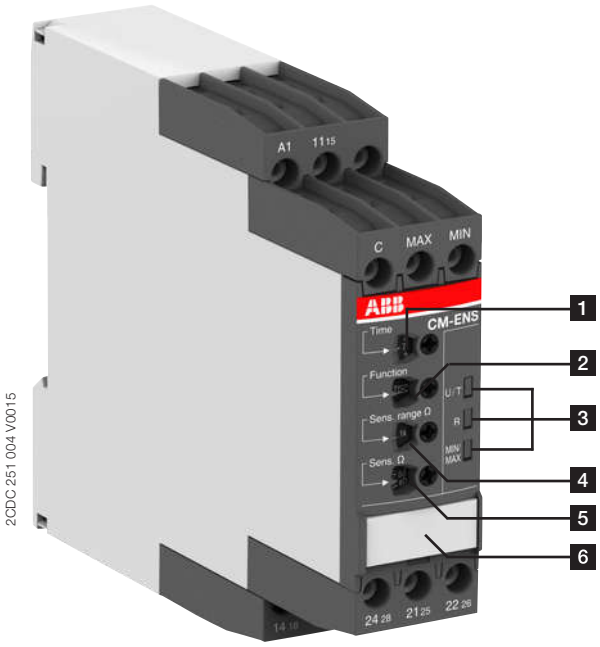

1 **Adjustment of the time delay**

2 **Adjustment of the function**

↑ ON-delayed Fill

↓ ON-delayed Drain

↑ OFF-delayed Fill

↓ OFF-delayed Drain

3 **Indication of operational states with LEDs**

U/T: green LED - Status indication of control supply voltage

control supply voltage applied

time delay is running

R: yellow LED - Status indication of the output relays

energized

MIN/MAX: yellow LED - Status indication of the electrodes

MIN and MAX wet

MIN wet

4 **Adjustment of the response sensitivity range**

5 **Adjustment of the response sensitivity**

6 **Marker label**

Application / Monitoring function

The liquid level monitoring relay CM-ENS monitors and controls the liquid level and ratios of mixtures of conductive fluids. It is used for filling and draining applications, to protect pumps against dry-running, tanks against overflow and for signalization of the status of the monitored liquid level.

Application examples

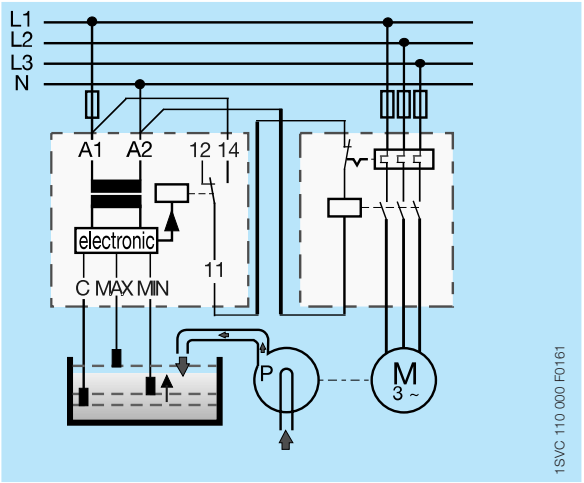

Liquid level control - fill - selected function "↑" (UP)

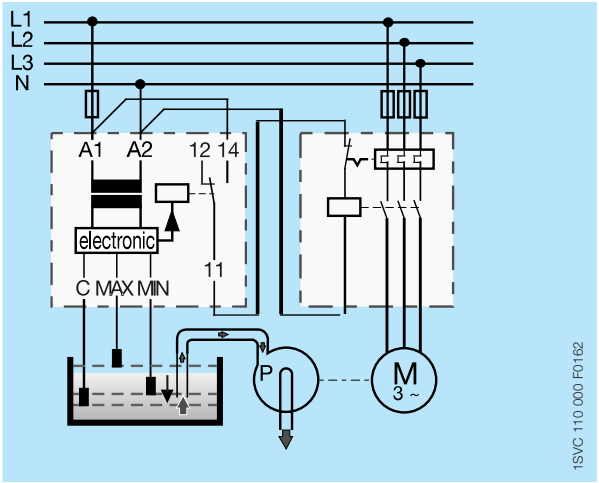

Liquid level control - drain - selected function "↓" (DOWN)

Operating mode with three electrodes

The CM-ENS.31 measures the electrical resistance of the liquid between two immersion electrodes and a reference electrode. The function fill (↑) or drain (↓) can be selected via a front-face potentiometer. If the fill function is selected, the output relays are energized until the MAX-electrode becomes wet. Then they are de-energized and not re-energized until the MIN electrode becomes dry. If the drain function is selected, the output relays energizes as soon as the MAX-electrode becomes wet. They remain energized until the liquid level has dropped below the MIN-electrode. In addition a time delay (ON or OFF) can be selected. This delay can be used to prevent accidential tripping due to wave formation in a tank.

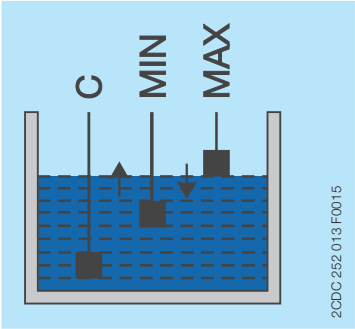

Operation with three electrodes

Operating mode with two electrodes

If only one level should be controlled, only the MAX-electrode shall be connected at the monitoring relay (see picture Operation with two electrodes).

If the fill function (↑) is selected, the output relays are energized as long as the MAX-electrode is dry and it returns to the original state once the MAX-electrode gets in contact with the monitored medium.

If the drain function (↓) is selected, the output relays are energized as long as the MAX-electrode is wet and it returns to the original state once the MAX-electrode is no longer in contact with the monitored medium.

Due to the integrated ON- or OFF-delay, it is possible to set up time-dependent liquid level controls using only two electrodes.

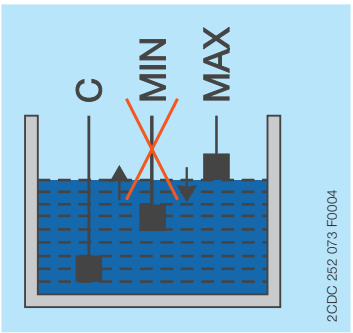

Operation with two electrodes

Cascading of several devices

With the CM-ENS.3x it is possible to use two devices in one tank. This enables, to realize a pre-warning with additional electrodes. In this way, two additional alarm outputs for exceeding or dropping below the normal level can be implemented in addition to the filling levels MAX and MIN. Also reserve pump can be connected to the additional device.

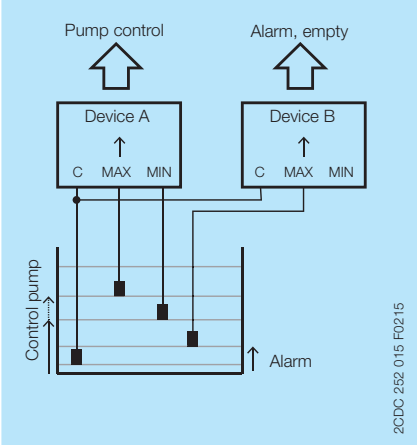

Fillling with alarm empty

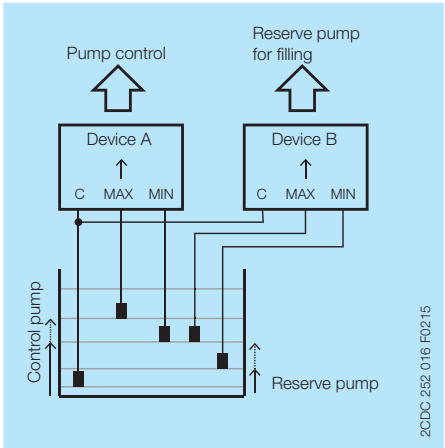

Filling with reserve pump

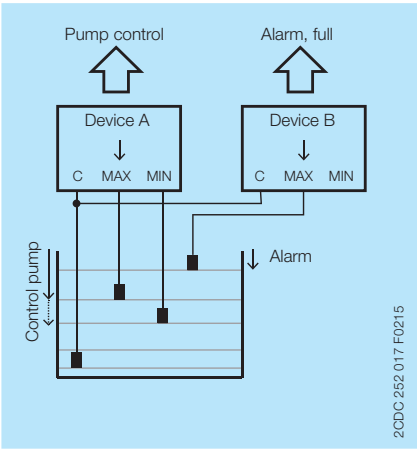

Draining with alarm full

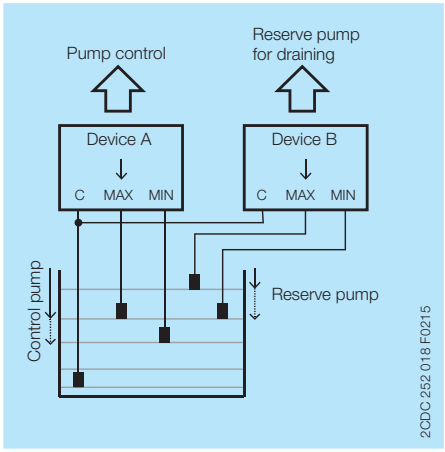

Draining with reserve pump

Electrical connection

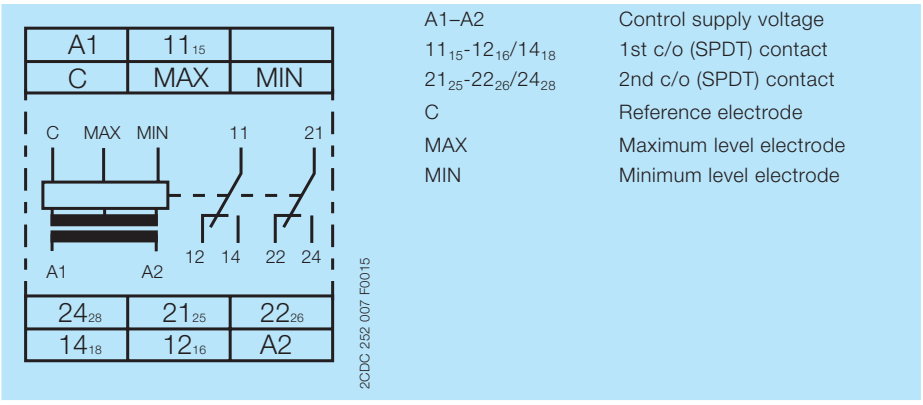

A1–A2	Control supply voltage
11_{15}-12_{16}/14_{18}	1st c/o (SPDT) contact
21_{25}-22_{26}/24_{28}	2nd c/o (SPDT) contact
C	Reference electrode
MAX	Maximum level electrode
MIN	Minimum level electrode

Connection diagram CM-ENS.31

Function diagrams

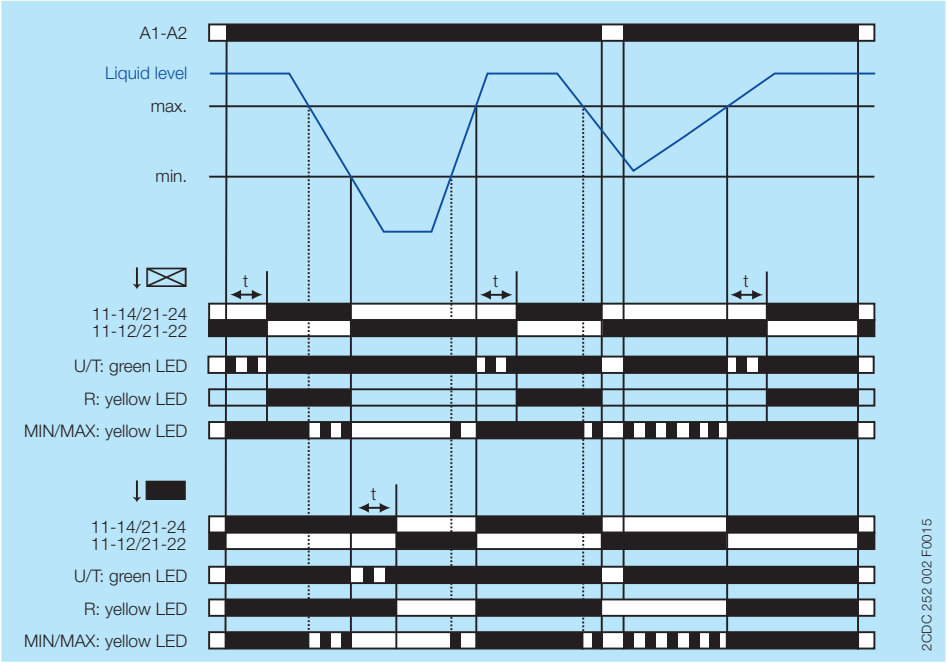

CM-ENS.31 Drain ON or OFF delay

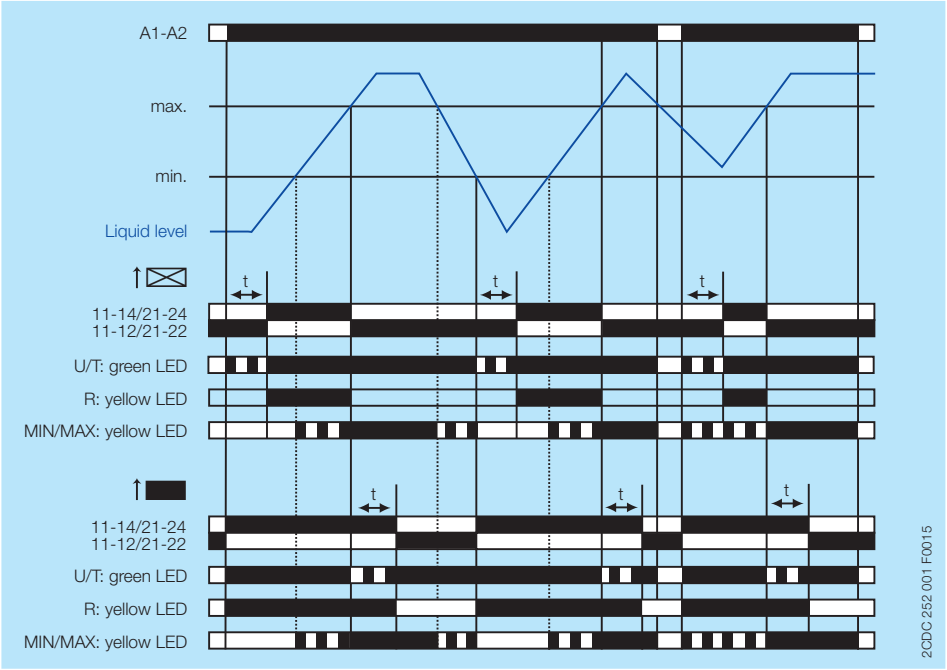

CM-ENS.31 Fill ON or OFF delay

Technical data

Data at T_a = 25 °C and rated values, unless otherwise indicated

Input circuit

Type		CM-ENS.31	
Supply circuit			
Rated control supply voltage U_s	A1-A2	24-240 V AC/DC	
Rated control supply voltage U_s tolerance		-15...+10 %	
Rated frequency		50/60 Hz	
Frequency range		47-63 Hz	
Typical current / power consumption	24 V AC	25 mA / 0.6 W	
	110-130 V AC	8 mA / 1.1 VA	
	220-240 V AC	10 mA / 2.4 VA	
	24-240 V AC/DC	11 mA / 2.6 VA	
Power failure buffering time	min.	20 ms	
Start-up time t_s	range 0.1-1 kΩ	max. 900 ms	
	range 1-10 kΩ	max. 900 ms	
	range 10-100 kΩ	max. 1.3 s	
	range 100-1000 kΩ	max. 6.3 s	

Measuring circuit		MAX-MIN-C	
Sensor type		electrode	
Monitoring functions		fill or drain, selectable	
Measuring principle		conductivity measurement	
Number of electrodes		3	
Response sensitivity		adjustable: 0.1-1000 kΩ	
Maximum electrode voltage		6 V AC	
Maximum electrode current		2 mA	
Electrode supply line		**max. cable capacity**	**max. cable length**
	range 0.1-1 kΩ	200 nF	1000 m
	range 1-10 kΩ	200 nF	1000 m
	range 10-100 kΩ	20 nF	100 m
	range 100-1000 kΩ	4 nF	20 m
Max. measuring cycle	range 0.1-1 kΩ	700 ms	
	range 1-10 kΩ	700 ms	
	range 10-100 kΩ	1.1 s	
	range 100-1000 kΩ	5 s	

Timing circuit	
Time delay	0.1-30 s, adjustable, ON- or OFF-delay

User interface

Indication of operational states		
Control supply voltage	U/T	green LED
Output relay energized	R	yellow LED
Electrode / alarm status	MAX/MIN	yellow LED

Output circuits

Kind of output	11-12/14	relay, 1st c/o (SPDT) contact
	21-22/24	relay, 2nd c/o (SPDT) contact
Operating principle		open- or closed-circuit principle (selectable)
Contact material		AgNi alloy, Cd free
Rated operational voltage U_e		250 V AC
Minimum switching voltage / Minimum switchting current		12 V / 10 mA
Maximum switchting voltage / Maximum switching current		See 'Load limit curves' on page <OV>
Rated operational current I_e	AC-12 (resistive) at 230 V	4 A
	AC-15 (inductive) at 230 V	3 A
	DC-12 (resistive) at 24 V	4 A
	DC-13 (inductive) at 24 V	2 A
AC rating (UL 508)	Utilization category (Control Circuit Rating Code)	B 300 pilot duty; general purpose 250 V, 4 A, cos φ 0.75
	max. rated operational voltage	300 V AC
	max. continuous thermal current at B 300	5 A
	max. making/breaking apparent power at B 300	3600/360 VA
Mechanical lifetime		10 x 10^6 switching cycles
Electrical lifetime	AC-12, 230 V, 4 A	0.1 x 10^6 switching cycles
Maximum fuse rating to achieve short-circuit protection	n/c contact	10 A fast-acting
	n/o contact	10 A fast-acting
Conventional thermal current I_{th}		4 A

General data

MTBF		on request	
Duty time		100 %	
Dimensions		see 'Dimensional drawings'	
Weight		**Screw connection technology**	**Easy Connect Technology (push-in)**
	net weight	0.143 kg (0.315 lb)	0.134 kg (0.295 lb)
	gross weight	0.168 kg (0.370 lb)	0.159 kg (0.350 lb)
Mounting		DIN rail (IEC/EN 60715), snap-on mounting without any tool	
Mounting position		any	
Minimum distance to other units		not necessary	
Material of housing		UL 94 V-0	
Degree of protection	housing	IP50	
	terminals	IP20	

Electrical connection

		Screw connection technology	**Easy Connect Technology (push-in)**
Connecting capacity	fine-strand with(out) wire end ferrule	1 x 0.5-2.5 mm² (1 x 18-14 AWG) 2 x 0.5-1.5 mm² (2 x 18-16 AWG)	2 x 0.5-1.5 mm² (2 x 18-16 AWG)
	rigid	1 x 0.5-4 mm² (1 x 20-12 AWG) 2 x 0.5-2.5 mm² (2 x 20-14 AWG)	2 x 0.5-1.5 mm² (2 x 20-16 AWG)
Stripping length		8 mm (0.32 in)	
Tightening torque		0.6 - 0.8 Nm (7.08 lb.in)	-

Environmental data

Ambient temperature ranges	operation	-25...+60 °C (-13...+140 °F)
	storage	-40...+85 °C (-40...+185 °F)
Damp heat, cyclic (IEC/EN 60068-2-30)		6 x 24 h cycle, 55 °C, 95 % RH
Climatic class (IEC/EN 60721-3-3)		3K5 (no condensation, no ice formation)
Vibration, sinusoidal		Class 2
Shock, half-sine		Class 2

Isolation data

Rated impulse withstand voltage U_{imp}	supply circuit / measuring circuit	4 kV
	supply circuit / output circuits	4 kV
	measuring circuit / output circuits	4 kV
	output circuit 1 / output circuit 2	4 kV
Rated insulation voltage U_i	supply circuit / measuring circuit	300 V
	supply circuit / output circuits	300 V
	measuring circuit / output circuits	300 V
	output circuit 1 / output circuit 2	300 V
Basic insulation	supply circuit / measuring circuit	250 V AC / 300 V DC
	supply circuit / output circuits	250 V AC / 300 V DC
	measuring circuit / output circuits	250 V AC / 300 V DC
	output circuit 1 / output circuit 2	250 V AC / 300 V DC
Protective separation (IEC/EN 61140, EN 50178)	supply circuit / measuring circuit	250 V AC / 300 V DC
	supply circuit / output circuits	250 V AC / 300 V DC
	measuring circuit / output circuits	250 V AC / 300 V DC
Pollution degree		3
Overvoltage category		III

Standards / Directives

Standards	IEC/EN 60947-5-1, IEC/EN 60255-27
Low Voltage Directive	2014/35/EU
EMC Directive	2014/30/EU
RoHS Directive	2011/65/EU

Electromagnetic compatibility

Type		
Interference immunity to		IEC/EN 61000-6-2, IEC/EN 60255-26
electrostatic discharge	IEC/EN 61000-4-2	Level 3 (6 kV / 8 kV)
radiated, radio-frequency, electromagnetic field	IEC/EN 61000-4-3	Level 3 (10 V/m)
electrical fast transient / burst	IEC/EN 61000-4-4	Level 3, 2 KV / 5 kHz
surge	IEC/EN 61000-4-5	Level 3, installation class 3, supply circuit and measuring circuit 1 kV L-L, 2 kV L-earth
conducted disturbances, induced by radio-frequency fields	IEC/EN 61000-4-6	Level 3, 10 V
voltage dips, short interruptions and voltage variations	IEC/EN 61000-4-11	Class 3
Interference emission		IEC/EN 61000-6-3
high-frequency radiated	IEC/CISPR 22, EN 55022	Class B
high-frequency conducted	IEC/CISPR 22, EN 55022	Class B

Technical diagrams

Load limit curves

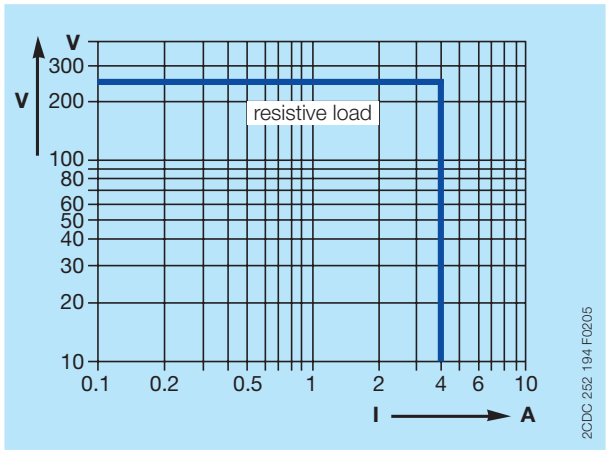

AC load (resistive)

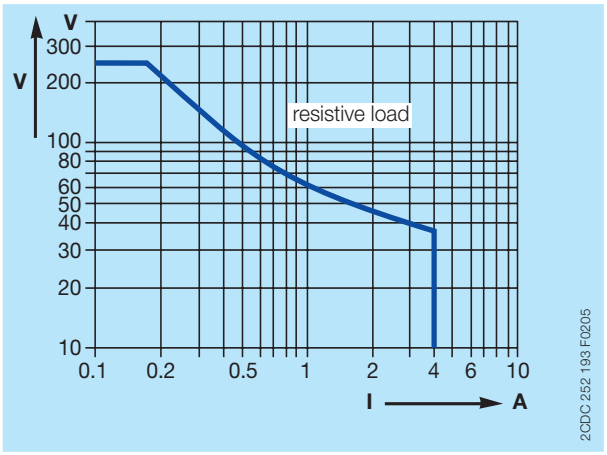

DC load (resistive)

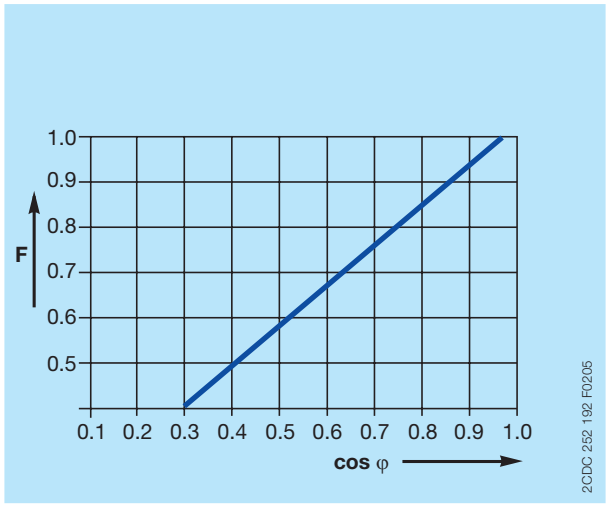

Reduction factor F for inductive AC load

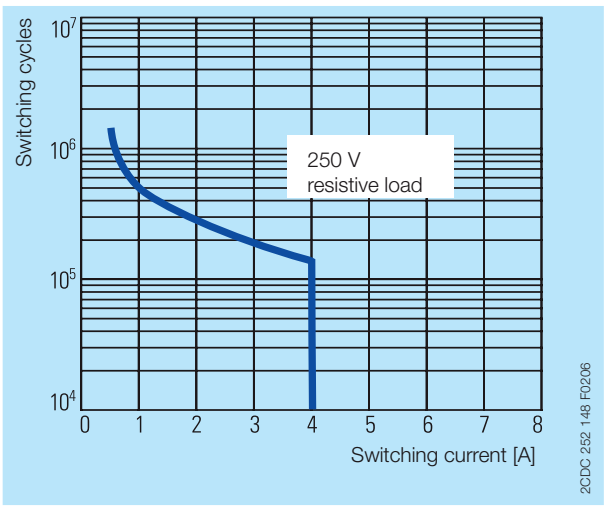

Contact life time / number of operations N
220 V 50 Hz 1 AC, 360 operations/h

Dimensions

in **mm** and inches

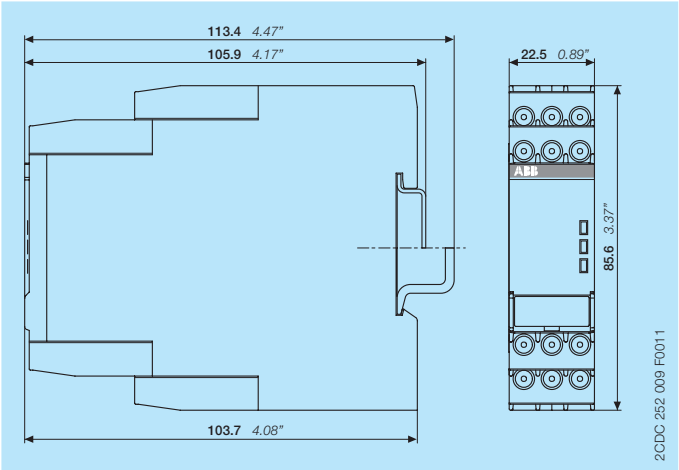

Accessories

in **mm** and inches

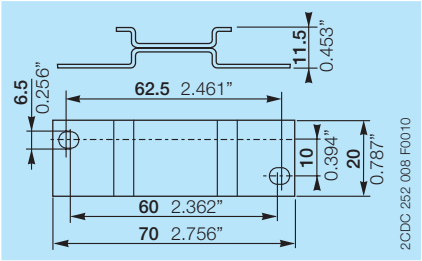

ADP.01 - Adapter for screw mounting

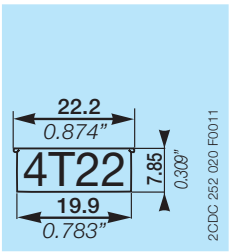

MAR.12 - Marker label for devices with DIP switches

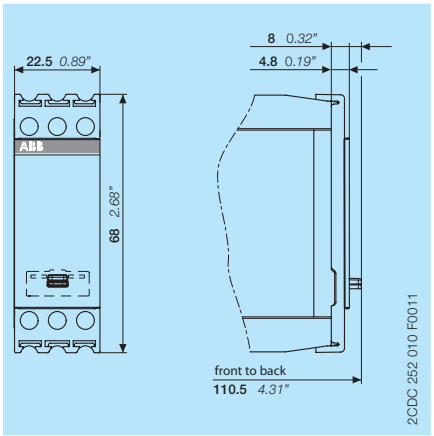

COV.11 - Sealable transparent cover

Further documentation

Document title	Document type	Document number
Electronic relays and controls	Catalog	2CDC 110 004 C02xx
Operating and installation instructions CM-ENS	Instruction manual	1SVC 730 680 M0000

You can find the documentation on the internet at www.abb.com/lowvoltage
-> Automation, control and protection -> Electronic relays and controls -> Measuring and monitoring relays.

CAD system files

You can find the CAD files for CAD systems at http://abb-control-products.partcommunity.com
-> Low Voltage Products & Systems -> Control Products -> Electronic Relays and Controls.

Contact us

ABB STOTZ-KONTAKT GmbH
P. O. Box 10 16 80
69006 Heidelberg, Germany
Phone: +49 (0) 6221 7 01-0
Fax: +49 (0) 6221 7 01-13 25
E-mail: info.desto@de.abb.com

You can find the address of your
local sales organisation on the
ABB home page
http://www.abb.com/contacts
-> Low Voltage Products and Systems

Document number 2CDC 112 230 D0201 (03/2017)

Note:
We reserve the right to make technical changes or modify the contents of this document without prior notice. With regard to purchase orders, the agreed particulars shall prevail. ABB AG does not accept any responsibility whatsoever for potential errors or possible lack of information in this document.

We reserve all rights in this document and in the subject matter and illustrations contained therein. Any reproduction, disclosure to third parties or utilization of its contents – in whole or in parts – is forbidden without prior written consent of ABB AG.

Copyright© 2017 ABB
All rights reserved