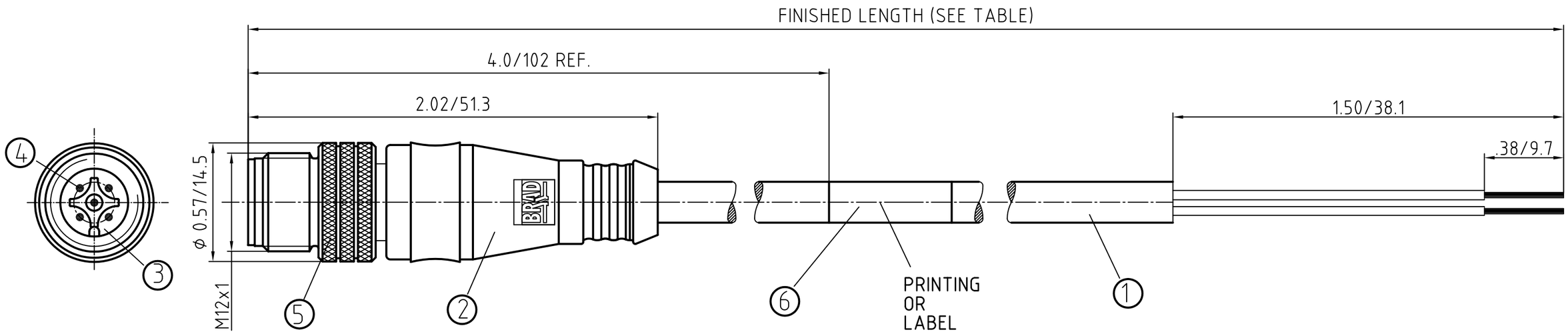

MALE FACE VIEW

3-POLE	4-POLE	5-POLE
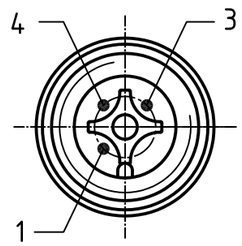	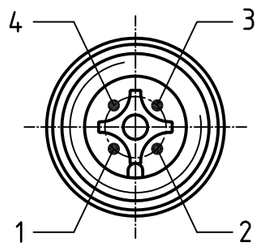	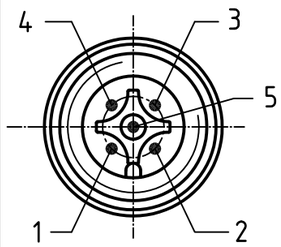

WIRING DIAGRAM

3-POLE	4-POLE	5-POLE
1 BROWN 3 BLUE 4 BLACK	1 BROWN 2 WHITE 3 BLUE 4 BLACK	1 BROWN 2 WHITE 3 BLUE 4 BLACK 5 GREY

CONNECTOR SPECIFICATION:

VOLTAGE RATING	250 VAC/VDC
AMPERAGE RATING	max. 4 AMPS
PROTECTION	IP67
OPERATING TEMPERATURE	-20°C TO 80°C

ITEM	COMPONENT	MATERIAL	FINISH
6	LABLE	MYLAR	BLACK/YELLOW
5	COUPLER	BRASS	NICKEL PLATED
4	PIN CONTACT	COPPER ALLOY	GOLD OVER NICKEL
3	INSERT	PUR	BLACK
2	OVERMOLD	POLYURETHANE (PUR)	YELLOW
1	CABLE- 22/3-5 (COPPER STRANDING) 3/4/5 CONDUCT. 300V	JACKET: PUR	BLACK

DESCRIPTION
EC NO: WEU2010-0284 2010/01/20
DRWN: LSTEMMLE ----
CH'KD: NS
APPR: NSTAUDIG 2010/01/26
DESCRIPTION
REV 1

QUALITY SYMBOLS
▼ = 0
Ⓒ = 0

GENERAL TOLERANCES (UNLESS SPECIFIED)

	mm	INCH
4 PLACES	±---	±---
3 PLACES	±---	±---
2 PLACES	±---	±.01
1 PLACE	±0.3	±---
ANGULAR ±	--- °	

DRAFT WHERE APPLICABLE MUST REMAIN WITHIN DIMENSIONS

DIMENSION STYLE: IN/MM
SCALE: 2:1
DESIGN UNITS: METRIC
THIRD ANGLE PROJECTION

DRAWN BY: ---- DATE: ----
CHECKED BY: RE DATE: 2010/01/21
APPROVED BY: NSTAUDIG DATE: 2010/01/25
MATERIAL NO.: SEE TABLE SHEET 2

MICRO-CHANGE CORDSET 3/4/5-POL MA STR SE 22/3-5 BLACK PUR CABLE

MOLEX INCORPORATED

DOCUMENT NO.: SD-120065-044
SHEET NO.: 1 OF 1
SIZE: A3

THIS DRAWING CONTAINS INFORMATION THAT IS PROPRIETARY TO MOLEX INCORPORATED AND SHOULD NOT BE USED WITHOUT WRITTEN PERMISSION

POL	MATERIAL NUMBER	ENGINEERING NUMBER	FINISHED LENGTH
3	1200060257	803006P03M020	6.56' +3.5" -0 [2.0M +89 -0]

POL	MATERIAL NUMBER	ENGINEERING NUMBER	FINISHED LENGTH
4	1200060570	804006P03M020	6.56' +3.5" -0 [2.0M +89 -0]
4	1200652141	804006P03M040	13.12' +6.5" -0 [4.0M +165 -0]
4	1200060047	804006P03M050	16.40' +6.5" -0 [5.0M +165 -0]
4	1200652142	804006P03M060	19.69' +6.5" -0 [6.0M +165 -0]
4	1200060572	804006P03M100	32.81' +12.5" -0 [10.0M +318 -0]

POL	MATERIAL NUMBER	ENGINEERING NUMBER	FINISHED LENGTH
5	1200060680	805006P03M020	6.56' +3.5" -0 [2.0M +89 -0]
5	1200652157	805006P03M040	13.12' +6.5" -0 [4.0M +165 -0]
5	1200060682	805006P03M050	16.40' +6.5" -0 [5.0M +165 -0]
5	1200062082	805006P03M060	19.69' +6.5" -0 [6.0M +165 -0]
5	1200652158	805006P03M100	32.81' +12.5" -0 [10.0M +318 -0]

DESCRIPTION
EC NO: WEU2010-0284 2010/01/20
DRWN: LSTEMMLE 2010/01/20
CH'KD: NS ----
APPR: NSTAUDIG 2010/01/26
DESCRIPTION
1
REV

QUALITY SYMBOLS
▼ = 0
Ⓒ = 0

GENERAL TOLERANCES (UNLESS SPECIFIED)

	mm	INCH
4 PLACES	±---	±---
3 PLACES	±---	±---
2 PLACES	±---	±.01
1 PLACE	±0.3	±---
ANGULAR ±	--- °	

DRAFT WHERE APPLICABLE MUST REMAIN WITHIN DIMENSIONS

DIMENSION STYLE: IN/MM
SCALE: 2:1
DESIGN UNITS: METRIC
THIRD ANGLE PROJECTION

DRAWN BY: ---- DATE: ----
CHECKED BY: RE DATE: 2010/01/21
APPROVED BY: NSTAUDIG DATE: 2010/01/25

MICRO-CHANGE CORDSET
3/4/5-POL MA STR SE
22/3-5 BLACK PUR CABLE

MOLEX INCORPORATED

MATERIAL NO.: SEE TABLE
DOCUMENT NO.: SD-120065-044
SHEET NO.: 1 OF 1
SIZE: A3

THIS DRAWING CONTAINS INFORMATION THAT IS PROPRIETARY TO MOLEX INCORPORATED AND SHOULD NOT BE USED WITHOUT WRITTEN PERMISSION