SOLENOID OPERATED DRAIN VALVE ASSEMBLY WITH ELECTRONIC TIMER

integrated inlet filter,
1/2" inlet, 1/4" outlet

NC 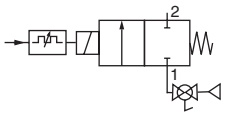

2/2

CDV

PRESENTATION

- *Solenoid valve with adjustable electronic timer, integrated manual shut-off and filter*
- *The electronic timer is particularly designed for automatic control of condensate draining periods at regular, adjustable intervals*



GENERAL

Differential pressure	See "Specifications" [1 bar =100 kPa]
Ambient temperature	-10°C to +50°C
Max. viscosity	40 cSt (mm²/s)
Response time	8 - 20 ms
Electronic timer	Converts a continuous power input into a succession of ON and OFF periods

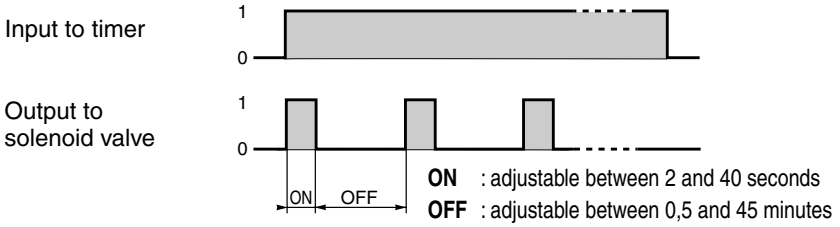

fluids (∗)	temperature range (TS)	seals (∗)
air, inert gas, water, oil	- 25°C to + 80°C	NBR (nitrile) FPM (fluoroelastomer)

MATERIALS IN CONTACT WITH FLUID

(∗) Ensure that the compatibility of the fluids in contact with the materials is verified

	Solenoid valve 1/4	Drain 1/2
Body	Brass	Brass
Internal parts	Stainless steel	Brass
Spring	Stainless steel	-
Seat	Brass and stainless steel	-
Seals	FPM	NBR
Shading coil	Copper	-
Inlet filter	-	Stainless steel strainer

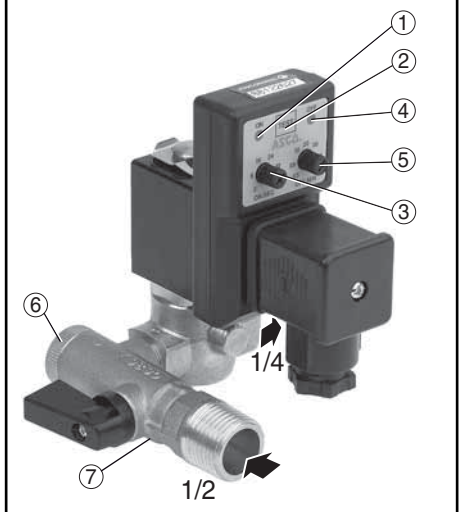

1. "Solenoid valve energised" light
2. Test button
3. Adjust on-period (ON)
4. "Solenoid valve de-energised" light
5. Adjust off-period (OFF)
6. Access to protective strainer
7. Valve inlet

ELECTRICAL CHARACTERISTICS

Coil insulation class	F
Coil connection	ISO 4400 / EN 175301-803, form A (for timer catalogue no. 88122627)
Connector	Spade plug (cable Ø 6-10 mm)
Connector specification	ISO 4400 / EN 175301-803, form A
Electrical safety	IEC 335
Electrical enclosure protection	Moulded IP65 (EN 60529)
Repeatability	± 0,1%
Scale accuracy	± 10%
Standard voltages	DC (=) : 24V - 48V
(Other voltages and 60 Hz on request)	AC (~) : 24V - 48V - 115V - 230V / 50 Hz

power ratings				operator ambient temperature range (TS)	replacement coil		type (1)
inrush ~	holding ~		hot/cold =		~	=	
(VA)	(VA)	(W)	(W)	(C°)	230 V/50 Hz	24 V DC	
55	23	10,5	9 / 11,2	-10 to + 50	400425-117	400425-142	01

(1) Refer to the dimensional drawings on the following page.

SPECIFICATIONS

pipe size	orifice size	flow coefficient Kv		operating pressure differential (bar)					power coil (W)		catalogue number of assembly consisting of solenoid valve, electronic timer and drain
				min.	max. (PS)						
					air (*)		water/oil (*)				
	(mm)	(m³/h)	(l/min)		~	=	~	=	~	=	~/=
NC - Normally closed											
drain port: G 1/2 port 2 : (G*) 1/4	4,5	0,42	7	0	16	5	16	5	10,5	11,2	**CDVAE272A019**

J

00193GB-2008/R02
Availability, design and specifications are subject to change without notice. All rights reserved.

OPTIONS AND ACCESSORIES

- Other pipe threads are available on request
- Plug with visual indication and peak voltage suppression or with cable length of 2 m (see Solenoids, Coils & Accessories section)

INSTALLATION

- The assembly can be mounted in any position without affecting operation
- Solenoid valves have 2 mounting holes in body (ØM4, depth 6 mm)
- 1/4 pipe connections (G*) have standard combination thread according to ISO 228/1 and ISO 7/1. Pipe connections G 1/2 have standard thread according to ISO 228/1
- Installation/maintenance instructions are included with each assembly

SPARE PARTS KIT

catalogue number	spare parts kit no.		
	solenoid valve ~/=	drain valve G 1/2	electronic timer
CDVAE272A019	**C140040**	**88100914**	**88122627**

ORDERING EXAMPLES:

CDVA E 272 **A** 019 230V / 50 Hz
CDVA E 272 **A** 019 24V DC

prefix
pipe thread
basic number
voltage

ORDERING EXAMPLES KITS:

C140040
basic number

DIMENSIONS (mm), WEIGHT (kg)



TYPE 01
IEC 335 / ISO 4400
Solenoid operated drain valve assembly with electronic timer 1/4 IP65

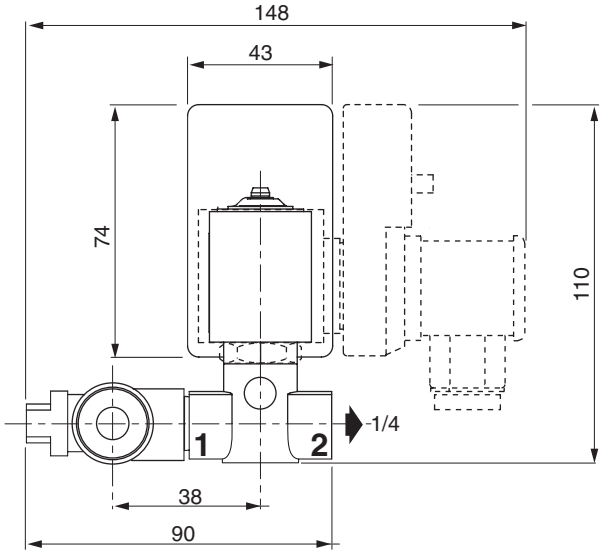

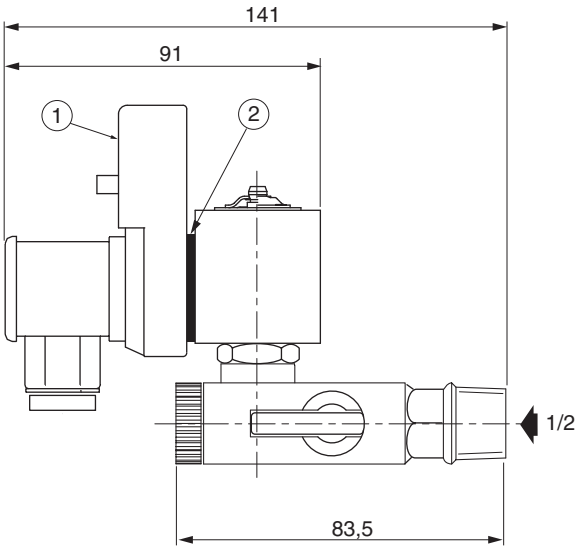

type	weight (1)
01	0,550

(1) Assembly with connector.

(1) Orientable electronic timer

(2) Seal and connection according to ISO 4400 / EN 175301-803, form A, for mounting of timer, catalogue number 88122627

00193GB-2007/R01
Availability, design and specifications are subject to change without notice. All rights reserved.

PILOT OPERATED DRAIN VALVE ASSEMBLY WITH ELECTRONIC TIMER

32 mm operator,
1/2

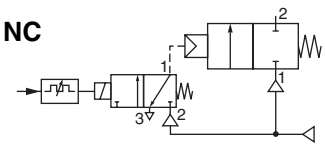



PRESENTATION

- *Drain valve /2 NC with solenoid pilot valve 3/2 NC and adjustable electronic timer for condensate draining applications (compressors etc.)*
- *The electronic timer is particularly designed for automatic control of condensate draining periods at regular, adjustable intervals*
- *The valve with stainless steel body is particularly suited for use with contaminated or corrosive fluids*

GENERAL

Differential pressure	See "Specifications" [1 bar =100 kPa]
Max. pressure	16 bar
Max. viscosity	600 cSt (mm²/s)
Pilot fluid	Air, water, filtered
Pilot pressure	See "Specifications"
Ambient temperature	-10°C to +50°C
Pilot fluid temperature	-10°C to +50°C
Electronic timer	Converts a continuous power input into a succession of ON and OFF periods

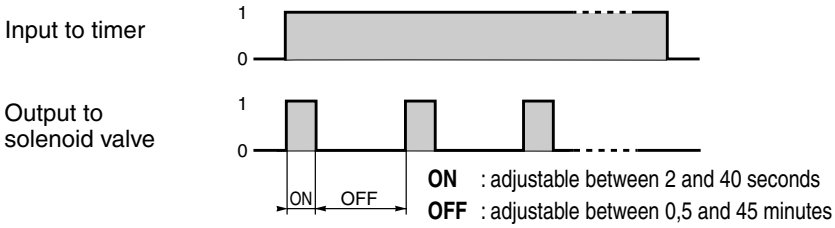

drain valve: fluids (∗)	temperature range (TS)	seals (∗)
air, inert gas, water, oil	- 10°C to + 140°C	PTFE

MATERIALS IN CONTACT WITH FLUID

(∗) Ensure that the compatibility of the fluids in contact with the materials is verified

	Solenoid pilot 1/8	Drain valve E290 1/2
Body	Brass	AISI 316L
Stuffing box body	-	AISI 316L
Internal parts	Stainless steel	Stainless steel
Spring	Stainless steel	-
Stuffing box packing	-	PTFE chevrons
Seat	Brass and stainless steel	-
Seals	NBR	FPM, PTFE
Shading coil	Copper	-
OTHER MATERIALS		
Operator	-	PA reinforced

ELECTRICAL CHARACTERISTICS

Coil insulation class	F
Coil connection	DIN 43650, 11mm, industry standard B (for timer catalogue no. 88122638)
Connector	Spade plug (cable Ø 6-10 mm)
Connector specification	ISO 4400 / EN 175301-803, form A
Electrical safety	IEC 335
Electrical enclosure protection	Moulded IP65 (EN 60529)
Repeatability	± 0,1%
Scale accuracy	± 10%
Standard voltages	DC (=) : 24V - 48V
(Other voltages and 60 Hz on request)	AC (~) : 24V - 48V - 115V - 230V / 50 Hz

power ratings				operator ambient temperature range (TS)	replacement coil		type (1)
inrush ~	holding ~		hot/cold =		~	=	
(VA)	(VA)	(W)	(W)	(C°)	230 V/50 Hz	24 V DC	
23	14	8	8 / 10,8	-10 to + 50	43005096	43005099	01

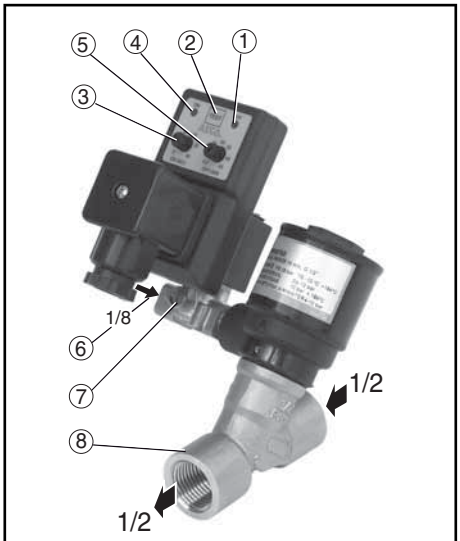

1. "Solenoid valve "de-energised" light
2. Test button
3. Adjust on-period (ON)
4. "Solenoid valve energised" light
5. Adjust off-period (OFF)
6. 1/8 pilot
7. Manual operator
8. Valve assembly 1/2, 32 mm operator

SPECIFICATIONS

pipe size	DN	flow coefficient Kv		pilot pressure (bar)		operating pressure differential (bar)			operator dia.	catalogue number of assembly consisting of drain valve, solenoid pilot valve and electronic timer
						min.	max. (PS) air, inert gas (*)	max. (PS) water/oil (*)		
(G*)	(mm)	(m³/h)	(l/min)	min.	max.				(mm)	
NC - Normally closed, fluid entry under the disc										
drain valve: 1/2	15	4,1	68	4	10	0	12	12	32	**CDVAE290A792**

00193GB-2008/R01
Availability, design and specifications are subject to change without notice. All rights reserved.

J

PILOT OPERATED DRAIN VALVE ASSEMBLY WITH ELECTRONIC TIMER CDV

OPTIONS AND ACCESSORIES

- Other pipe threads are available on request
- Optical position indicator on dia. 32 mm operator
- Plug with visual indication and peak voltage suppression or with cable length of 2 m (see Solenoids, Coils & Accessories section)

INSTALLATION

- The assembly can be mounted in any position without affecting operation
- Compatible with ASTM oils 1, 2 and 3
- Pipe connections (G*) have standard combination thread according to ISO 228/1 and ISO 7/1
- Installation/maintenance instructions are included with each assembly

SPARE PARTS KIT

catalogue number	spare parts kit no.	
	drain valve Ø 32 mm	electronic timer
CDVAE290A792	**C140101**	**88122638**

ORDERING EXAMPLES:

CDVA E 290 **A** 792 230V / 50 Hz
CDVA E 290 **A** 792 24V DC

prefix
pipe thread
basic number
voltage

ORDERING EXAMPLES KITS:

C140101
basic number

DIMENSIONS (mm), WEIGHT (kg)



TYPE 01
32 mm operator
Fluid entry at port 2 under the disc
Pilot operated drain valve assembly with electronic timer
1/8 IP65

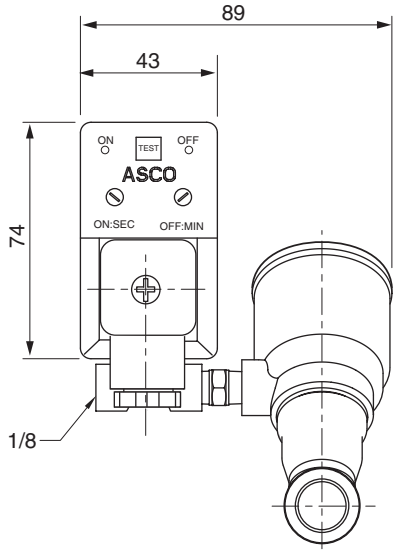

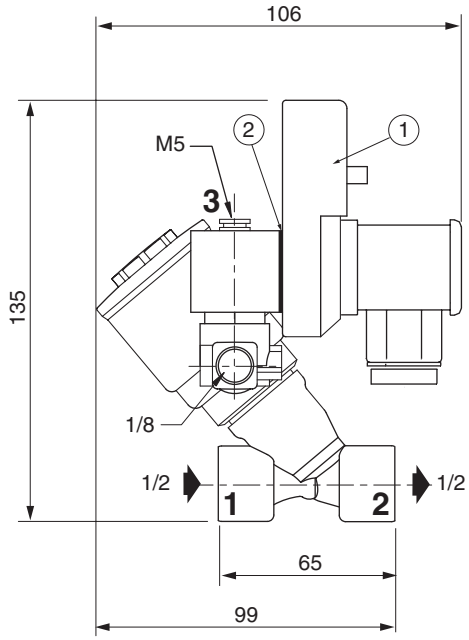

type	weight (1)
01	0,555

(1) Assembly with connector.

(1) Orientable electronic timer

(2) Seal and connection according to DIN 43650, 11 mm, industry standard B, for mounting of timer - catalogue number 88122638

00193GB-2007/R01
Availability, design and specifications are subject to change without notice. All rights reserved.