ebm-papst Mulfingen GmbH & Co. KG
Bachmühle 2
D-74673 Mulfingen
Phone +49 (0) 7938 81-0
Fax +49 (0) 7938 81-110
info1@de.ebmpapst.com
www.ebmpapst.com

CONTENTS

1. SAFETY REGULATIONS AND NOTES 1
1.1 Levels of hazard warnings 1
1.2 Staff qualification 1
1.3 Basic safety rules 1
1.4 Electrical voltage 1
1.5 Safety and protective functions 2
1.6 Electromagnetic radiation 2
1.7 Mechanical movement 2
1.8 Emission 2
1.9 Hot surface 2
1.10 Transport 2
1.11 Storage 2

2. PROPER USE 3

3. TECHNICAL DATA 4
3.1 Product drawing 4
3.2 Nominal data 5
3.3 Technical features 5
3.4 Mounting data 5
3.5 Transport and storage conditions 5
3.6 Electromagnetic compatibility 5

4. CONNECTION AND START-UP 6
4.1 Connecting the mechanical system 6
4.2 Connecting the electrical system 6
4.3 Connection of the cables 6
4.4 Connection screen 7
4.5 Checking the connections 8
4.6 Switch on device 8
4.7 Switching off the device 8

5. MAINTENANCE, MALFUNCTIONS, POSSIBLE CAUSES AND REMEDIES 8
5.1 Cleaning 9
5.2 Safety test 9
5.3 Disposal 9

Translation of the original operating instructions

1. SAFETY REGULATIONS AND NOTES

Please read these operating instructions carefully before starting to work with the device. Observe the following warnings to prevent malfunctions or physical damage to both property and people.
These operating instructions are to be regarded as part of this device.
If the device is sold or transferred, the operating instructions must accompany it.
These operating instructions may be duplicated and forwarded for information about potential dangers and their prevention.

1.1 Levels of hazard warnings

These operating instructions use the following hazard levels to indicate potentially hazardous situations and important safety regulations:



DANGER
Indicates an imminently hazardous situation which, if not avoided, will result in death or serious injury. Compliance with the measures is mandatory.

WARNING
Indicates a potentially hazardous situation which, if not avoided, could result in death or serious injury. Exercise extreme caution while working.

CAUTION
Indicates a potentially hazardous situation which, if not avoided, may result in minor or moderate injury or damage of property.

NOTE
A potentially harmful situation can occur and, if not avoided, can lead to property damage.

1.2 Staff qualification

The device may only be transported, unpacked, installed, operated, maintained and otherwise used by qualified, trained and authorised technical staff.
Only authorised specialists are permitted to install the device, to carry out a test run and to perform work on the electrical installation.

1.3 Basic safety rules

Any safety hazards stemming from the device must be re-evaluated once it is installed in the end device.
The local industrial safety regulations must always be observed when working on the device.
Keep the workplace clean and tidy. Untidiness in the working area increases the risk of injury.
Observe the following when working on the unit:

⇒ Do not make any modifications, additions or conversions to the device without the approval of ebm-papst.

1.4 Electrical voltage

⇒ Check the electrical equipment of the device at regular intervals, refer to chapter 5.2 Safety test.

⇒ Replace loose connections and defective cables immediately.



WARNING
Terminals and connections have voltage even with a unit that is shut off
Electric shock

→ Wait five minutes after disconnecting the voltage at all poles before opening the device.

CAUTION
If control voltage is applied or a speed setpoint is stored, the motor will restart automatically, e.g. after a mains failure.
Risk of injury

→ Keep out of the device hazard zone.

→ When working on the device, switch off the mains power and ensure that it cannot be switched back on.

→ Wait until the device stops.

→ After working on the device, remove any tools used or other objects from the device.

1.5 Safety and protective functions



DANGER
Protective device missing and protective device not functioning
Without a protective device there is a risk of serious injury, for instance when reaching into the device during operation.

→ Operate the device only with a fixed protective device and guard grille.

→ The fixed protective device must be able to withstand the kinetic energy of a fan blade that becomes detached at maximum speed. There must not be any gaps which it is possible to reach into with the fingers, for example.

→ The device is a built-in component. As the operator, you are responsible for ensuring that the device is secured adequately.

→ Stop the device immediately if a protective device is found to be missing or ineffective.

1.6 Electromagnetic radiation

Interference from electromagnetic radiation is possible, e.g. in conjunction with open and closed-loop control devices.
If unacceptable emission intensities occur when the fan is installed, appropriate shielding measures have to be taken by the user.

NOTE
Electrical or electromagnetic interferences after integrating the device in installations on the customer's side.

→ Verify that the entire setup is EMC compliant.

1.7 Mechanical movement



DANGER
Rotating device
Body parts that come into contact with the rotor and impeller can be injured.

→ Secure the device against accidental contact.

→ Before working on the system/machine, wait until all parts have come to a standstill.

WARNING
Rotating device
Long hair, dangling items of clothing, jewellery and similar items can become entangled and be pulled into the device. Risk of injury.

→ Do not wear any loose-fitting or dangling clothing or jewellery while working on rotating parts.

→ Protect long hair with a cap.

1.8 Emission

WARNING
Depending on the installation and operating conditions, a sound pressure level greater than 70 dB(A) may arise.
Danger of noise-induced hearing loss

→ Take appropriate technical safety measures.

→ Protect operating personnel with appropriate safety equipment, e.g. hearing protection.

→ Also observe the requirements of local agencies.

1.9 Hot surface



CAUTION
High temperature at the electronics housing
Risk of burns

→ Ensure sufficient contact protection.

1.10 Transport

NOTE
Transport of device

→ Transport the device in its original packaging only.

→ Secure the device so that it does not slip, e.g. by using a clamping strap.

1.11 Storage

⇒ Store the device, partially or fully assembled, in the original packaging in a clean, dry and weatherproof place free of vibrations.

⇒ Protect the device against environmental effects and dirt until final installation.

⇒ We recommend storing the device for no longer than one year in order to guarantee trouble-free operation and longest possible service life.

⇒ Even devices explicitly intended for outdoor use are to be stored as described prior to commissioning.

⇒ Maintain the storage temperature, see chapter 3.5 Transport and storage conditions.

Translation of the original operating instructions

ebm-papst Mulfingen GmbH & Co. KG · Bachmühle 2 · D-74673 Mulfingen · Phone +49 (0) 7938 81-0 · Fax +49 (0) 7938 81-110 · info1@de.ebmpapst.com · www.ebmpapst.com

2. PROPER USE

The device is exclusively designed as a built-in device for conveying air according to its technical data.
Any other usage above and beyond this does not conform with the intended purpose and constitutes misuse of the device.
Customer equipment must be capable of withstanding the mechanical and thermal stresses that can arise from this product. This applies for the entire service life of the equipment in which this product is installed.

Proper use also includes:

- Use the device in DC power systems only.
- Conveying of air at an ambient air pressure of 800 mbar to 1050 mbar.
- Using the device in accordance with the permitted ambient temperature, see chapter 3.5 Transport and storage conditions and chapter 3.2 Nominal data.
- Operating the device with all protective features in place.
- Minding the operating instructions.

Improper use

Using the device in the following ways is particularly prohibited and may cause hazards:

- Operating the device with an imbalance, e.g. caused by dirt deposits or icing.
- Resonance mode, operation with heavy vibrations. These also include vibrations that are transmitted from the customer system to the fan.
- Operation in medical equipment with a life-sustaining or lifesaving function.
- Moving solids content in flow medium.
- Painting the device
- Connections (e.g. screws) coming loose during operation.
- Moving air that contains abrasive particles.
- Moving highly corrosive air, e.g. salt spray mist. Exceptions are devices that are intended for salt spray mist and protected accordingly.
- Moving air that contains dust pollution, e.g. suctioning off saw dust.
- Operating the device close to flammable materials or components.
- Operating the device in an explosive atmosphere.
- Using the device as a safety component or for taking on safety-related functions.
- Operation with completely or partially disassembled or modified protective features.
- In addition, all application options that are not listed under proper use.

Translation of the original operating instructions

ebm-papst Mulfingen GmbH & Co. KG · Bachmühle 2 · D-74673 Mulfingen · Phone +49 (0) 7938 81-0 · Fax +49 (0) 7938 81-110 · info1@de.ebmpapst.com · www.ebmpapst.com

3. TECHNICAL DATA

3.1 Product drawing

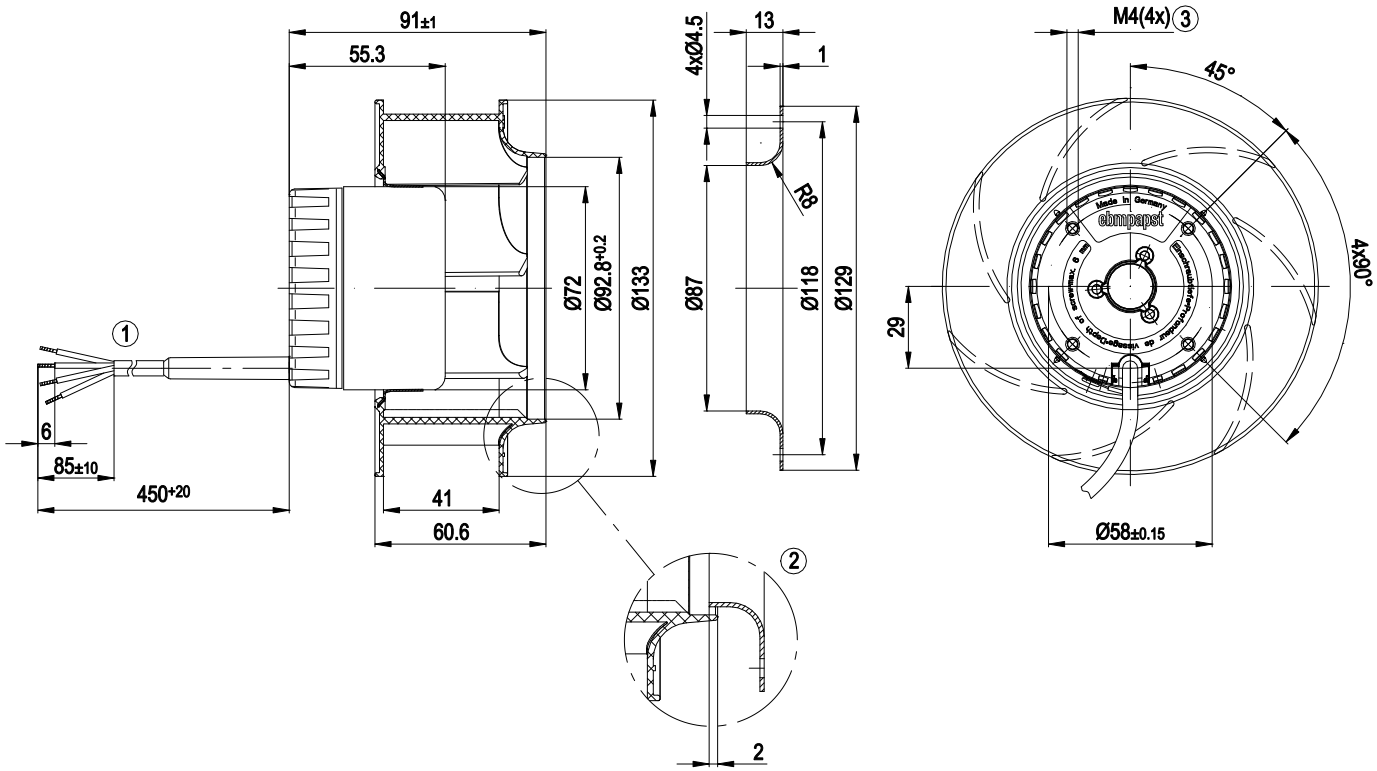

All measures have the unit mm.

1	Connection line AWG20; 4 x brass lead tips crimped
2	Accessory part: Inlet nozzle 09566-2-4013, not included in the standard scope of delivery
3	Depth of screw max. 6 mm

Translation of the original operating instructions

ebm-papst Mulfingen GmbH & Co. KG · Bachmühle 2 · D-74673 Mulfingen · Phone +49 (0) 7938 81-0 · Fax +49 (0) 7938 81-110 · info1@de.ebmpapst.com · www.ebmpapst.com

3.2 Nominal data

Motor	M1G055-BD

Nominal voltage / VDC	24
Nominal voltage range / VDC	16 .. 28

Type of data definition	fa
Speed (rpm) / min-1	3900
Power input / W	28
Current draw / A	1.3
Min. ambient temperature / °C	-25
Max. ambient temperature / °C	60

ml = Max. load · me = Max. efficiency · fa = Running at free air
cs = Customer specs · cu = Customer unit

Subject to alterations

3.3 Technical features

Mass	0.65 kg
Size	133 mm
Motor size	55
Surface of rotor	Thick layer passivated
Material of electronics housing	Die-cast aluminium
Material of impeller	Plastic PA66, fibreglass-reinforced
Number of blades	7
Direction of rotation	Clockwise, seen on rotor
Type of protection	IP20
Insulation class	"B"
Humidity (F) / environmental protection class (H)	H0 - dry environment
Mounting position	Any
Condensation drainage holes	Rotor-side
Operation mode	S1
Motor bearing	Ball bearing
Technical features	- Control input 0-10 VDC / PWM - Tach output - Motor current limit - Soft start
Motor protection	Reverse polarity and locked-rotor protection
Cable exit	Variable
Approval	EAC; UL 1004-1; CSA C22.2 no. 77

For cyclic speed loads, note that the rotating parts of the device are designed for maximum one million load cycles. If you have specific questions, contact ebm-papst for support.

⇒ Use the device in accordance with its protection type.

Notes on surface quality

The surfaces of the products conform to the generally applicable industrial standard. The surface quality may vary during the production period. Strength, dimensional stability and dimensional accuracy are not affected by this.
The colour pigments of the paints used react perceptibly to UV light over the course of time. This does not however have any influence on the technical properties of the products. To prevent the formation of patches and fading, the product is to be protected against UV radiation. Changes in colour are not a reason for complaint and are not covered by the warranty.

3.4 Mounting data

⇒ Secure the mounting screws against accidentally coming loose (e.g. by using self-locking screws).

For depth of screw, see chapter 3.1 Product drawing

Strength class for mounting screws	8.8

Any further mounting data required can be taken from the product drawing or Section chapter 4.1 Connecting the mechanical system.

3.5 Transport and storage conditions

Max. permissible ambient motor temp. (transp./ storage)	+80 °C
Min. permissible ambient motor temp. (transp./storage)	-40 °C

3.6 Electromagnetic compatibility

EMC interference immunity	Acc. to EN 61000-6-2 (industrial environment)
EMC interference emission	Acc. to EN 61000-6-3 (household environment)

Translation of the original operating instructions

ebm-papst Mulfingen GmbH & Co. KG · Bachmühle 2 · D-74673 Mulfingen · Phone +49 (0) 7938 81-0 · Fax +49 (0) 7938 81-110 · info1@de.ebmpapst.com · www.ebmpapst.com

4. CONNECTION AND START-UP

4.1 Connecting the mechanical system



CAUTION
Cutting and crushing hazard when removing the fan from the packaging



→ Carefully hold the impeller to remove the device from its packaging. Make sure to avoid any shock.

→ Wear safety shoes and cut-resistant safety gloves.

NOTE
Damage to device from vibration
Bearing damage, reduced service life

→ Forces or impermissibly high vibration levels must not be transmitted to the fan from system components.

→ If the fan is connected to air ducts, it should isolated from vibrations, for example using compensators or similar elements.

→ Fasten the fan to the substructure without distorting it.

⇒ Check the device for transport damage. Damaged devices must no longer be installed.

⇒ Install the undamaged device according to your application.



CAUTION
Possibility of damage to the device
Serious damage may result if the device slips during assembly.

→ Keep the device fixed in position at the installation location until all attachment screws have been tightened.

- The fan must not be strained on fastening.

4.2 Connecting the electrical system

CAUTION
Electrical voltage
The fan is a built-in component and features no electrically isolating switch.

→ Only connect the fan to circuits that can be switched off with an all-pole separating switch.

→ When working on the fan, you must switch off the installation/machine in which the fan is installed and secure it from being switched on again.

NOTE
Water penetration into leads or wires
Water enters at the cable end on the customers side and can damage the device.

→ Make sure that the cable end is connected in a dry environment.



Operate the device with a safely isolated power pack.

4.2.1 Prerequisites

⇒ Check that the data on the type plate match the connection data.

⇒ Before connecting the device, ensure that the supply voltage matches the operating voltage of the device.

⇒ Only use cables designed for current according to the type plate. For determining the cross-section, follow the basic principles in accordance with EN 61800-5-1. The protective earth must have a cross-section equal to or greater than the outer conductor cross-section.
We recommend the use of 105°C cables. Ensure that the minimum cable cross-section is at least AWG26/0.13 mm².

4.3 Connection of the cables

External leads are brought out of device.

- Connect the lines according to your application. When doing so, observe chapter 4.4 Connection screen.

Translation of the original operating instructions

ebm-papst Mulfingen GmbH & Co. KG · Bachmühle 2 · D-74673 Mulfingen · Phone +49 (0) 7938 81-0 · Fax +49 (0) 7938 81-110 · info1@de.ebmpapst.com · www.ebmpapst.com

4.4 Connection screen

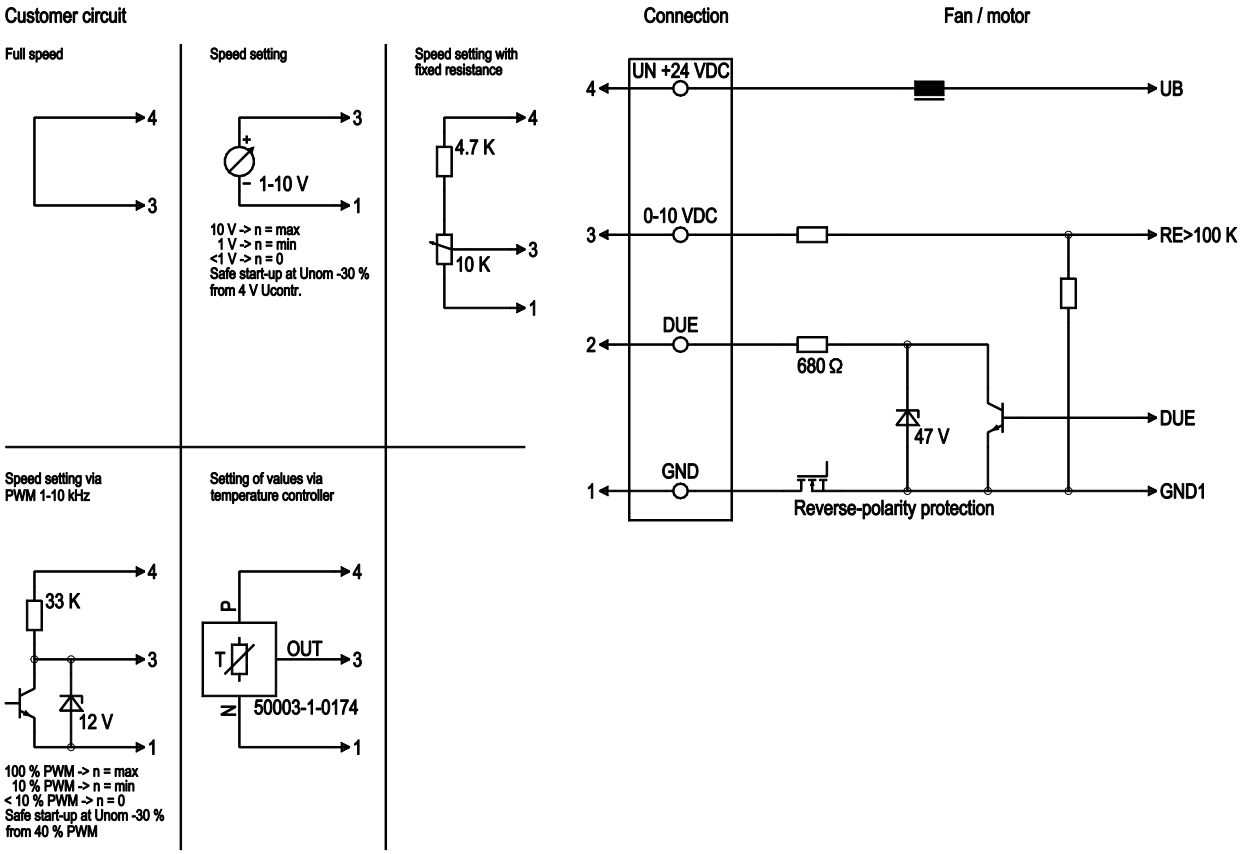

No.	Conn.	Designation	Colour	Function / assignment
1	1	GND	blue	Reference mass
1	2	Tach	white	Speed monitoring output, 2 pulses per rotation, Isink max = 10 mA
1	3	0-10 VDC	yellow	Control input Re > 100 K
1	4	Un +24 VDC	red	Power supply 24 VDC, residual ripple 3.5 %

Translation of the original operating instructions

ebm-papst Mulfingen GmbH & Co. KG · Bachmühle 2 · D-74673 Mulfingen · Phone +49 (0) 7938 81-0 · Fax +49 (0) 7938 81-110 · info1@de.ebmpapst.com · www.ebmpapst.com

4.5 Checking the connections

⇒ Make sure that the power is off (all phases).

⇒ Secure it from being switched on again.

⇒ Check the correct fit of the connection lines.

4.6 Switch on device

The device is not to be switched on until it has been installed properly and in accordance with its intended use, including the required protective devices and professional electrical connection. This also applies to devices which have already been equipped with plugs and terminals or similar connectors by the customer.



WARNING
Hot motor housing
Fire hazard

→ Ensure that no combustible or flammable materials are located close to the fan.

⇒ Inspect the device for visible external damage and the proper function of the protective features before switching it on.

⇒ Check the air flow paths of the fan for foreign objects and remove any that are found.

⇒ Apply the nominal voltage to the voltage supply.

⇒ Start the device by changing the input signal.



NOTE
Damage to device by vibrations
Bearing damage, reduced service life

→ The fan must operate free of vibrations throughout its speed control range.

→ Strong vibrations can result from improper handling, imbalance resulting from damage during transport, or component-induced or structural resonances.

→ When putting the fan into service, determine the speed ranges with excessive vibration levels and also any resonance frequencies that may be present.

→ When regulating the speed, pass through resonance ranges as quickly as possible or find another remedy.

→ Operation at excessive vibration levels can lead to premature failure.

4.7 Switching off the device

Switching off the device during operation:

⇒ Switch off the device via the control input.

⇒ Do not switch the motor (e.g. in cyclic operation) on and off via power supply.

Switching off the device for maintenance work:

⇒ Switch off the device via the control input.

⇒ Do not switch the motor (e.g. in cyclic operation) on and off via power supply.

⇒ Disconnect the device from the supply voltage.

5. MAINTENANCE, MALFUNCTIONS, POSSIBLE CAUSES AND REMEDIES

Do not perform any repairs on your device. Return the device to ebm-papst for repair or replacement.



WARNING
Terminals and connections have voltage even with a unit that is shut off
Electric shock

→ Wait five minutes after disconnecting the voltage at all poles before opening the device.

CAUTION
If control voltage is applied or a speed setpoint is stored, the motor will restart automatically, e.g. after a mains failure.
Risk of injury

→ Keep out of the device hazard zone.

→ When working on the device, switch off the mains power and ensure that it cannot be switched back on.

→ Wait until the device stops.

→ After working on the device, remove any tools used or other objects from the device.



NOTE
If the device is not operated for a lengthy period in installed condition in a dry environment, it is to be started up and operated at full speed for one hour at least every four months. If the device is not operated for a lengthy period in installed condition in a damp environment (e.g. outdoors), it is to be started up and operated at full speed for at least two hours once a month to move the bearings and allow any condensate that may have ingressed to evaporate.

Malfunction/error	Possible cause	Possible remedy
Impeller running roughly	Imbalance in rotating parts	Clean the device; if imbalance is still evident after cleaning, replace the device. If you have attached any weight clips during cleaning, make sure to remove them afterwards.
Motor does not turn	Mechanical blockage	Switch off, de-energise, and remove mechanical blockage.
	Mains supply voltage faulty	Check mains supply voltage, restore power supply, apply control signal.
	Faulty connection	De-energise, correct connection, see connection diagram.

Translation of the original operating instructions

ebm-papst Mulfingen GmbH & Co. KG · Bachmühle 2 · D-74673 Mulfingen · Phone +49 (0) 7938 81-0 · Fax +49 (0) 7938 81-110 · info1@de.ebmpapst.com · www.ebmpapst.com

Overtemperature of electronics/motor	Insufficient cooling	Improve cooling. Let the device cool down. To reset the error message, switch off the mains supply voltage for a min. of 25 s and switch it on again.
	Ambient temperature too high	Reduce the ambient temperature. Reset by reducing control input to 0.
	Unacceptable operating point	Correct the operating point. Let the device cool down.

If you have any other problems, contact ebm-papst.

5.1 Cleaning

NOTE
Damage to the device during cleaning
Malfunction possible

→ Do not clean the device using a water jet or high-pressure cleaner.

→ Do not use any acid, alkali or solvent-basedcleaning agents.

→ Do not use any pointed or sharp-edged objects for cleaning

5.2 Safety test

What has to be tested?	How to test?	Frequency	Which measure?
Check the protective casing against accidental contact for damage and to ensure that it is intact	Visual inspection	At least every 6 months	Repair or replacement of the device
Check the device for damage to blades and housing	Visual inspection	At least every 6 months	Replacement of the device
Mounting the connection lines	Visual inspection	At least every 6 months	Fasten
Check the insulation of the wires for damage	Visual inspection	At least every 6 months	Replace wires
Impeller for wear/deposits/ corrosion and damage	Visual inspection	At least every 6 months	Clean impeller or replace device
Condensate discharge holes for clogging, as necessary	Visual inspection	At least every 6 months	Open bore holes
Abnormal bearing noise	acoustic	At least every 6 months	Replace device

5.3 Disposal

For ebm-papst, environmental protection and resource preservation are top priority corporate goals.
ebm-papst operates an environmental management system which is certified in accordance with ISO 14001 and rigorously implemented around the world on the basis of German standards.
Right from the development stage, ecological design, technical safety and health protection are fixed criteria.
The following section contains recommendations for ecological disposal of the product and its components.

5.3.1 Country-specific legal requirements

NOTE
Country-specific legal requirements
Always observe the applicable country-specific legal regulations with regard to the disposal of products or waste occurring in the various phases of the life cycle. The corresponding disposal standards are also to be heeded.

5.3.2 Disassembly

Disassembly of the product must be performed or supervised by qualified personnel with the appropriate technical knowledge.
The product is to be disassembled into suitable components for disposal employing standard procedures for motors.

WARNING
Heavy parts of the product may drop off. Some of the product components are heavy. These components could drop off during disassembly.
This can result in fatal or serious injury and material damage.

→ Secure components before unfastening to stop them falling.

5.3.3 Component disposal

The products are mostly made of steel, copper, aluminium and plastic. Metallic materials are generally considered to be fully recyclable.
Separate the components for recycling into the following categories:

- Steel and iron
- Aluminium
- Non-ferrous metal, e.g. motor windings
- Plastics, particularly with brominated flame retardants, in accordance with marking
- Insulating materials
- Cables and wires
- Electronic scrap, e.g. circuit boards

Only ferrite magnets and not rare earth magnets are used in external rotor motors from ebm-papst Mulfingen GmbH & Co. KG.

⇒ Ferrite magnets can be disposed of in the same way as normal iron and steel.

Electrical insulating materials on the product, in cables and wires are made of similar materials and are therefore to be treated in the same manner.
The materials concerned are as follows:

- Miscellaneous insulators used in the terminal box
- Power lines
- Cables for internal wiring
- Electrolytic capacitors

Translation of the original operating instructions

ebm-papst Mulfingen GmbH & Co. KG · Bachmühle 2 · D-74673 Mulfingen · Phone +49 (0) 7938 81-0 · Fax +49 (0) 7938 81-110 · info1@de.ebmpapst.com · www.ebmpapst.com

Dispose of electronic components employing the proper procedures for electronic scrap.



→ Please contact ebm-papst for any other questions on disposal.

Translation of the original operating instructions

ebm-papst Mulfingen GmbH & Co. KG · Bachmühle 2 · D-74673 Mulfingen · Phone +49 (0) 7938 81-0 · Fax +49 (0) 7938 81-110 · info1@de.ebmpapst.com · www.ebmpapst.com