# EVC964

## Connection cable

VDOGH050MSE0010C05STGH050MSS

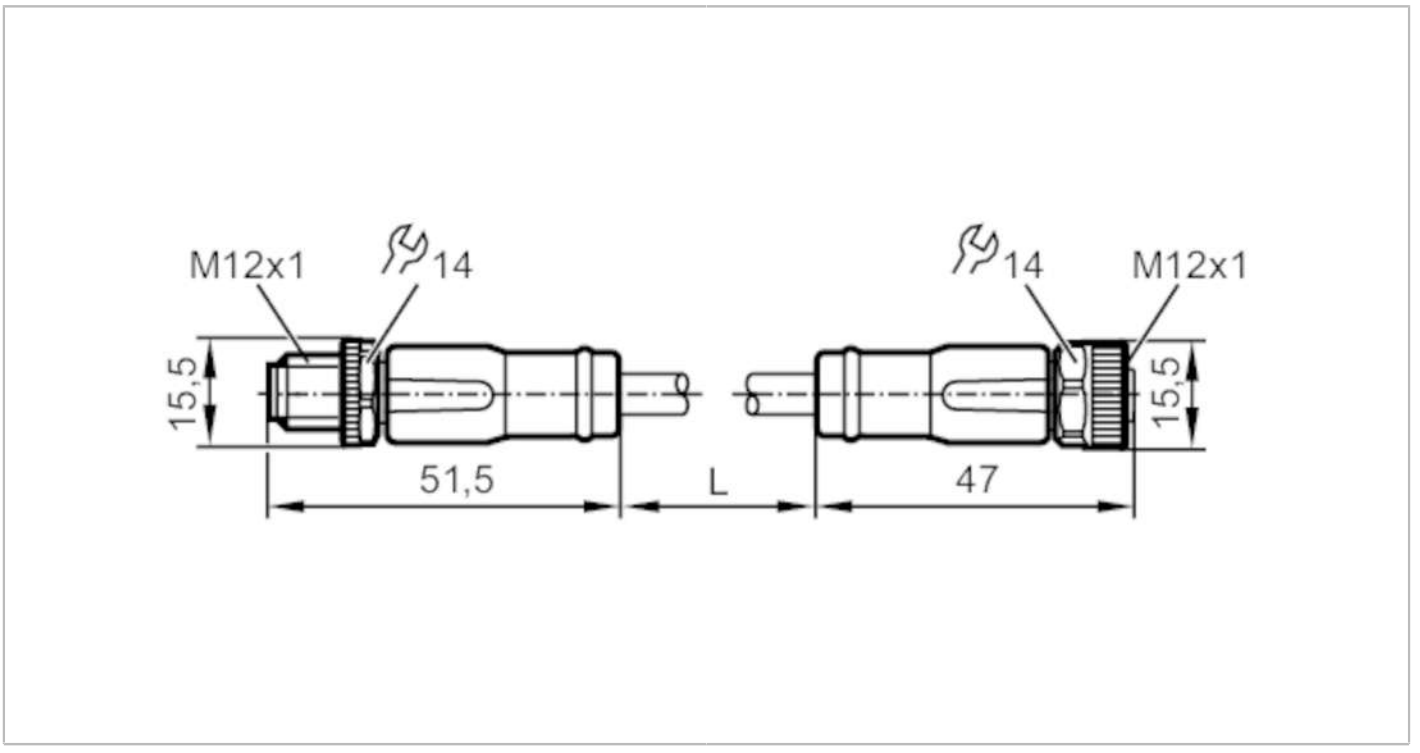


| | | | |
|---|---|---|---|
| **Application** | | | |
| Special feature | | Halogen-free; Gold-plated contacts; Screened cable; Drag chain suitability | |
| Application | | CAN bus | |
| **Electrical data** | | | |
| Operating voltage | [V] | 32 DC;  (wires 4+5: 5 V) | |
| Max. current load total | [A] | 4;  (wires 4+5: 0,05 A) | |
| **Operating conditions** | | | |
| Ambient temperature | [°C] | -25...80 | |
| Protection | | IP 67; IP 68; IP 69K | |
| **Mechanical data** | | | |
| Weight | [g] | 1009.25 | |
| Moulded-body material | | TPU | |
| Material nut | | brass, nickel-plated | |
| Sealing material | | FKM | |
| Drag chain suitability | | yes | |
| Drag chain suitability | | bending radius for flexible use | min. 10 x cable diameter |
| | | travel speed | max. 3.3 m/s for a horizontal travel length of 5 m and max. acceleration of 5 m/s² |
| | | bending cycles | > 5 Mio. |
| | | torsional strain | ± 180 °/m |
| **Remarks** | | | |
| Remarks | | The CAN bus terminating resistor (120 Ω) is integrated in the M12 connector. | |
| Pack quantity | | 1 pcs. | |

# EVC964

## Connection cable

VDOGH050MSE0010C05STGH050MSS

### Electrical connection - plug

Connector: 1 x M12, straight; coding: A; Moulded body: TPU, black; Locking: brass, nickel-plated; Contacts: gold-plated; Tightening torque: 0.6...1.5 Nm

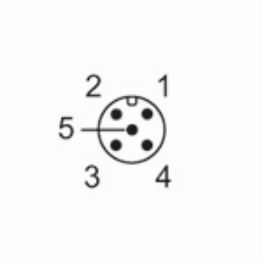


### Electrical connection

Cable: 10 m, PUR, Halogen-free, lilac, Ø 8.4 mm, shielded; RD / BK: 2 x 0.75 mm² (42 x Ø 0.15 mm ) + WH / BU: 2 x 0.5 mm² (19 x Ø 0.19 mm ) + screen: 1 x 0.75 mm² (42 x Ø 0.15 mm )

Connection

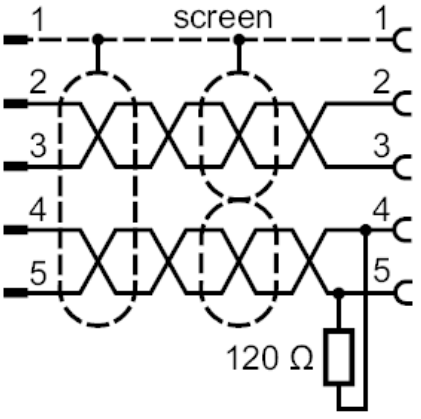


### Electrical connection - socket

Connector: 1 x M12, straight; coding: A; Moulded body: TPU, black; Locking: brass, nickel-plated; Sealing: FKM; Contacts: gold-plated; Tightening torque: 0.6...1.5 Nm

