# AC2316

## AS-Interface dual sensor for pneumatic valve actuators

DUAL SENSOR T5 2SI 1DO T M12

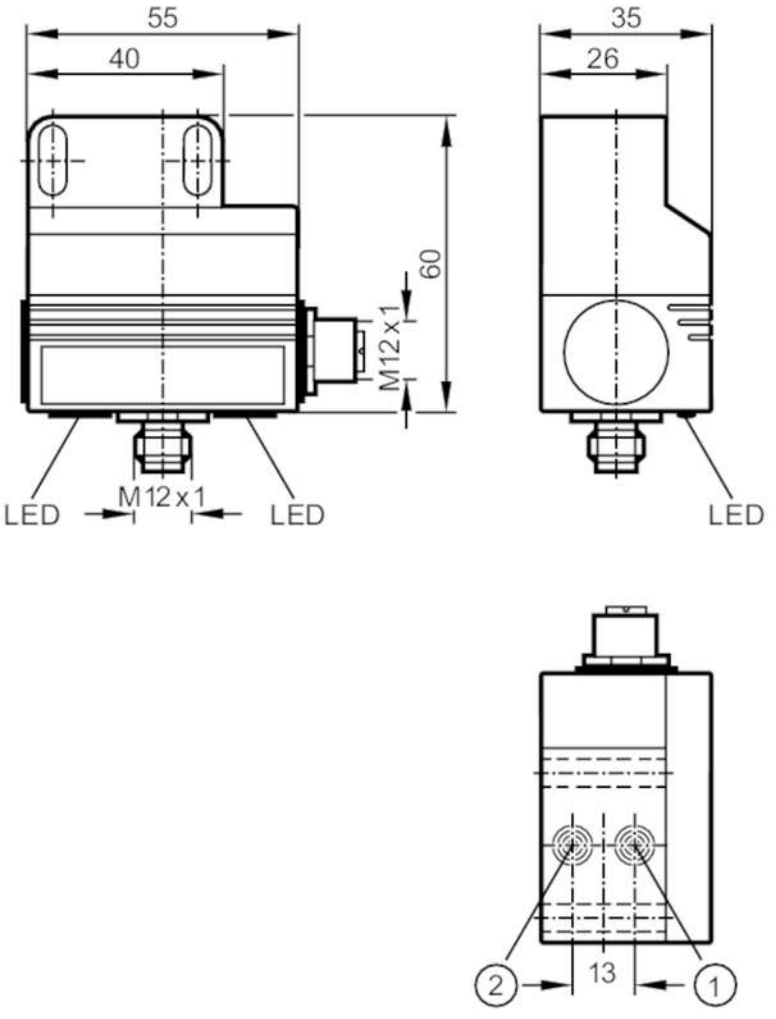


1 sensor 1
2 sensor 2

| | | |
|---|---|---|
| **Product characteristics** | | |
| Electrical design | | AS-i |
| Sensing range | [mm] | 4 |
| Dimensions | [mm] | 55 x 60 x 35 |
| **Electrical data** | | |
| Operating voltage | [V] | 26.5...31.6 DC; ("supply class 2" to cULus) |
| Current consumption | [mA] | < 160 |
| **Outputs** | | |
| Electrical design | | AS-i |
| Permanent current rating of switching output DC | [mA] | 100 |
| **Detection zone** | | |
| Sensing range | [mm] | 4 |

# AC2316

## AS-Interface dual sensor for pneumatic valve actuators

DUAL SENSOR T5 2SI 1DO T M12

| | | | |
|---|---|---|---|
| **Operating conditions** | | | |
| Ambient temperature | [°C] | -20...70 | |
| Protection | | IP 67 | |
| **Tests / approvals** | | | |
| EMC | | EN 50295 | |
| | | EN 61000-6-2 | |
| MTTF | [years] | 310 | |
| **AS-i classification** | | | |
| AS-i version | | 2.1 | |
| Extended addressing mode | | yes | |
| AS-i I/O configuration | [hex] | 7 | |
| AS-i ID code | [hex] | A.E | |
| AS-i certificate | | 75002 | |
| **Mechanical data** | | | |
| Weight | [g] | 179 | |
| Mounting | | non-flush mountable | |
| Dimensions | [mm] | 55 x 60 x 35 | |
| Materials | | PBT | |
| **Displays / operating elements** | | | |
| Display | | switching status | 2 x LED, yellow |
| **Accessories** | | | |
| Items supplied | | Reinforcement bracket | |
| | | socket head screws: 2 x M5 x 35 | |
| | | washers: 2 | |
| **Remarks** | | | |
| Pack quantity | | 1 pcs. | |
| **Electrical connection** | | | |
| **Electrical connection - plug** | | | |

Connector: 1 x M12; coding: A; Locking: stainless steel (1.4305 / 303)



# AC2316

## AS-Interface dual sensor for pneumatic valve actuators

**DUAL SENSOR T5 2SI 1DO T M12**

### Connection

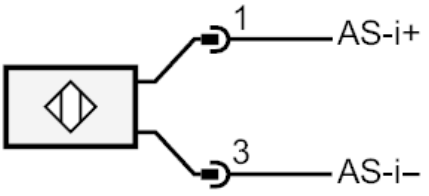


### Electrical connection

| | |
|---|---|
| 1 | AS-i + |
| 3 | AS-i - |

### Electrical connection - socket

Connector: 1 x M12; coding: A; Locking: stainless steel (1.4305 / 303)

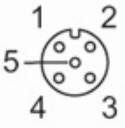


### Outputs

| | |
|---|---|
| 3 | external voltage - |
| 4 | switching output 1 + |