

BANNER®

the photoelectric specialist

COLOR MARK Sensors

Banner has more solutions for color mark registration control.



Banner's vast array of color mark sensing devices includes solutions for every level of contrast detection, from basic economical units for high-volume OEM applications to highly sophisticated, programmable devices with the features and capabilities to solve your most challenging color mark and contrast-detection applications.



R55F: High-resolution fiber optic color mark sensor.

A compact, solid-state sensor that detects 16 levels of gray scale at 10,000 actuations per second! Available with glass or plastic fibers for maximum application compatibility.

See pages 4-5.



R55E: Precise, microprocessor-programmable color mark sensor.

The most precise and easiest to program color mark sensor achieves unprecedented resolution. Features pushbutton TEACH programming and user-friendly setup.

See page 6.



R55: The versatile, high-performance color mark sensor.

A reliable solid-state sensor that provides outstanding detection and resolution. DIP switch programmability and three built-in timing functions.

See page 7.



MINI-BEAM *Expert*™: The world's smartest photoelectric.

The world's most popular miniature photoelectric sensor now "learns" light and dark sensing conditions with the push of a single button.

See page 8.



D11 & D11 *Expert*™: Plastic fiber optic sensors.

DIN rail mountable fiber optic sensors. Available with red, green or blue LEDs to optimize performance in all color mark detection applications.

See page 8.



SL & SLE Series: Opposed mode photoelectric sensors.

Rugged self-contained slot sensors that don't require alignment. Ideal for many applications, including color mark detection on clear film.

See page 9.



SLC1 Series Label Sensor.

A high-speed, high-precision label sensor. Adaptive Digital Logic (ADL™) enables the SCL1 to "learn" label characteristics, enabling it to reliably detect minute differences in material contrast levels.

See page 9.



Glass & Plastic Fiber Optics.

"Pipe" light into otherwise inaccessible and/or hostile environments. A huge selection of standard glass and plastic fibers in virtually all shapes and sizes. Custom fibers can be designed and built to exact specifications for unique applications.

See pages 18 - 23.

Superior technology easily applied to your applications.



Up to 10,000 actuations per second!

With a response time of only 50 µs, R-Series Color Mark Sensors will keep up with your fastest production requirements and allow you to use smaller color registration marks. In many applications, you can use an "eye spot" on the package decoration, and eliminate color registration marks all together. Built-in off-delays and one-shot logic (R55 only), allow R-Series sensors to interface with slower inputs, including those in PLCs.

Unsurpassed resolution & reliability.

The sophisticated electronic design of the R-Series sensors, with their solid-state emitter and receiver, permits printed color registration mark differentiation previously achieved only with short-lived incandescent sensor technology. The sensor's solid-state light source reliably detects all colors used in today's print jobs, including marks with extremely low contrast, such as 20% yellow ink on newsprint.

Innovative Dynamic & Static TEACH programming.

The R55E and R55F models are amazingly easy to operate. An advanced dual-mode TEACH function streamlines setup and on/off threshold programming. In Static TEACH mode, just point and click to "teach" the sensor individual light conditions. In Dynamic TEACH mode, the sensor "learns" a series of conditions on-the-fly, computes and self-programs the signal threshold, and then periodically updates it to compensate for changing conditions during operation.

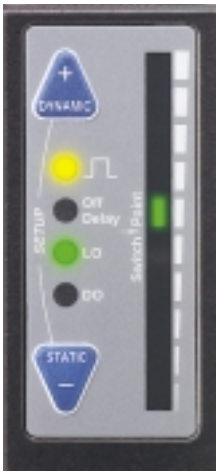

LED light bar contrast indication.

This advanced moving bar display indicates signal strength and switch point to make setup fast and easy, and allow you to evaluate contrast levels quickly.

Sense brightness, surface texture or color, or perform surface mapping.

R55E and R55 models feature an analog output and extremely high sensitivity that makes them accurate instruments for measuring surface brightness, texture consistency, color recognition, surface mapping of printed media, and numerous other quality control applications.



Reliably sense numerous difficult colors.

R-Series sensors can sense any color on a white background, including light pastel colors and holograms. The color chart at right shows many of the colors reliably detected.





R55F: TEACH programming offers a new level of resolution & simplicity.

Microprocessor-based programming achieves unsurpassed resolution.

Advanced programming features enable the R55F to reliably detect 16 levels of grayscale at up to 10,000 actuations per second, resulting in outstanding color contrast sensitivity for all of your applications.





Advanced TEACH programming for unmatched simplicity & performance.

The R55F's innovative TEACH function offers you two options for sensing threshold programming. Static TEACH is used to set sensing conditions individually, and Dynamic TEACH is an automated method of "teaching" a series of conditions, and automatically updating the signal threshold while the sensor is operating.

Dynamic TEACH programs the sensor "on-the-fly."

Dynamic TEACH enables the R55F to "learn" a series of conditions "on-the-fly," sample the sensing events, compute the optimum threshold between "light" and "dark" conditions, then self-program that setting and periodically update it to compensate for any changes in sensing conditions during operation.

Static TEACH computes each sensing condition individually.

In Static TEACH mode, you just point the R55F at an "on" condition and push one button to "teach" or program that condition. Simply repeat the procedure for the "off" condition and the sensor computes the optimal setting. You can also manually override the microprocessor-selected settings by simply pushing the "plus" or "minus" buttons.



Precise indication of sensing contrast and switchpoint.

A highly visible, 10-segment green LED bar provides continuous signal strength and switch point indication to assist you during setup and operation. You have visual indication of your sensing contrast level and application reliability.

LED diagnostics.

Easy-to-read diagnostic indicators keep you constantly aware of operating status. Green LEDs indicate "Light Operate," "Dark Operate," and selected output delay. A yellow LED indicates "Outputs Conducting."

Programmable sensor functions.

In SETUP mode, you can program the outputs for "Light Operate" or "Dark Operate" and select one of three output delay options.

R55F: Fiber optics offer unlimited options to access your applications.



Hundreds of standard glass & plastic fibers or custom fibers built fast to your specifications.

Banner fiber optics are your best choice for color registration mark sensing. The vast selection of fibers includes hundreds of shapes and sizes. There are glass fibers for harsh environments and easy-to-install, cut-to-length plastic fibers, plus models for applications that require repeated or continuous fiber bending. Custom fibers can be designed and built to exact specifications quickly and easily for your unique applications. The R55F sensor includes a unique mechanical holding feature that captures, locks, and seals the fibers to an IP67 rating, without the need for special tools. See fibers on pages 18-23.



Directly replace older sensors.

With the included mounting bracket, the R55F's footprint dimensions and mounting holes are a perfect match to those of older devices. This makes the R55F a quick and convenient upgrade with superior performance and more sensor features.



Choice of red, green, white or blue visible sensing beam.

Choose from four sensing beam colors to optimize your R55F sensor for maximum sensitivity to any color. R55F sensors respond to light or dark signals to accurately detect even the most challenging color mark combinations, including 20% yellow on newsprint!





Remote programming.

TEACH programming can also be accomplished remotely, via switch or process controller, for added automation and security.





Choice of mounting options.

The R55 offers the convenience of DIN-rail mounting. With the included brackets, it can also be mounted flat or directly to your machines. Banner has numerous other brackets readily available, and can custom design a bracket for your exact application, including compliance with FDA specifications.

See page 14 for model selection.



R55 *Expert*™: TEACH mode programming for ultimate performance & ease of use.

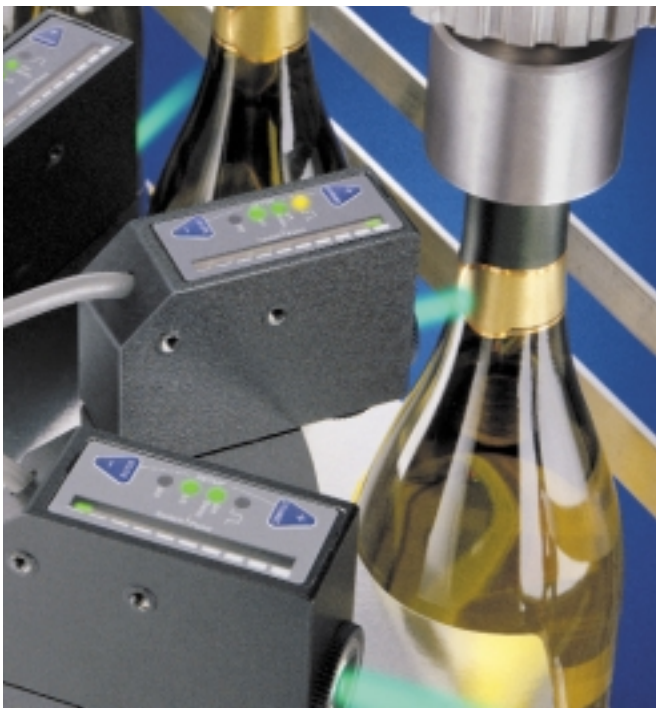

Choose Dynamic or Static TEACH mode programming.

The R55 *Expert*™ (R55E) features a dual-mode TEACH function with two push-button options for programming sensing limits. Static TEACH allows you to program individual sensing conditions by pointing the sensor at the output "on" and output "off" conditions and pushing a button. Dynamic TEACH enables the sensor to "learn" a series of conditions on-the-fly, sample the sensing events to compute the threshold between the light and dark conditions, and update the threshold periodically to compensate for changing conditions. Microprocessor-selected settings can be manually adjusted by simply pushing the "plus" or "minus" buttons.



Prewired or QD wiring, 10-30V dc.

Choose attached, potted-in cable, or 6-pin, Euro-style, quick-disconnect connector that allows easy sensor installation and removal. Keyed connectors prevent wiring errors.

Robust metal construction.

R55 and R55E sensor housings are constructed of die-cast zinc alloy to withstand severe environmental conditions and impacts. They are leakproof and meet IP67 and NEMA 6P standards for harsh sensing environments.

Replace short-lived incandescent sensors.

Thanks to the R55's advanced electronics, you no longer need to replace burned out bulbs. The R55 is a more simple and reliable solution. And its familiar shape and mounting holes make retrofitting existing sensors extremely easy.

LED light bar contrast indication.

Continuous signal strength and switch point indication, provided via a 10-segment green light bar, simplify setup and operation. You'll always know if you have the best setting and be immediately informed if performance is compromised by environmental factors such as dust or dirt.



Microprocessor-based for maximum performance.

Using precision microprocessor-controlled programming, the R55E can detect 16 levels of grayscale at up to 10,000 actuations per second, resulting in extraordinary color contrast sensitivity. You get vastly superior performance versus older technology.

Rugged acrylic lens.

R55 and R55E sensors feature a high optical quality acrylic lens that eliminates glass and meets requirements for use in applications with proximity to food and drug products.

White, green or blue LED emitters.

The choice of a white, green or blue LED light source gives users the ideal sensing solution for maximum sensitivity to any color, even low-contrast targets.

See page 14 for model selection.



R55: The versatile, high-performance color mark sensor with potentiometer adjustment.



DIP switch programmable.

The R55's four DIP switches, located under an easy-access cover, allow you to program "light" or "dark" operation and timer logic. You can also turn the bar graph display off to discourage tampering. The cover is attached with a tether to prevent loss.



Three timing functions built-in.

You can program the sensor's built-in timing functions by simply adjusting the DIP switches. Select a 50 ms off-delay (pulse stretcher), or a 50 ms non-retriggerable one-shot timer to simplify interfacing to slower responding inputs such as PLCs. Select both timing functions together to create a third function, a 100 ms retriggerable one-shot timer for applications such as rate sensing.

Easy 15-turn sensitivity adjustment.

A single potentiometer adjustment, achieved with fingers or a screwdriver, easily fine-tunes the sensitivity of the sensor for all applications. Rugged adjustment is clutched at both ends to prevent breakage.



Digital and instrument-quality analog outputs.

The R55 has built-in NPN (sinking) and PNP (sourcing) digital outputs, each rated 150 mA maximum. All units also include an analog output to greatly extend the sensor's capabilities.

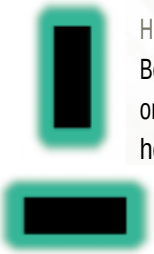

Horizontal or vertical light spot.

Both the R55 and the R55E allow you to order models with a light spot that is horizontal to the sensor body, or one where light spot is perpendicular to the sensor body, for convenient mounting.

Range & application tolerant.

The R55 and R55E have a focal point of 10 mm, with an impressive plus or minus 3 mm depth of field which makes them easy to set up and more tolerant to application variations, such as web flutter, while eliminating false-triggering of the output.

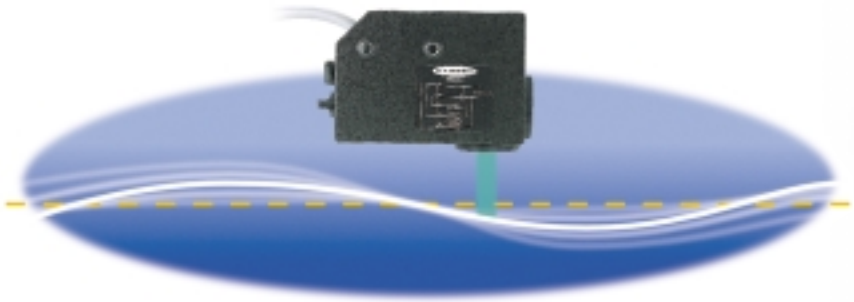

Dual lens positions.

The lens can be positioned in either of two locations, allowing significant mounting flexibility. And O-ring sealed knurled lens fittings allow for instant changeover.



See page 14 for model selection.

Banner color mark sensors for less-demanding applications & OEM products.

MINI-BEAM® *Expert*™:
Miniature sensor with push-button TEACH programming.

The MINI-BEAM *Expert* features a highly advanced, "teachable" microprocessor. In TEACH mode, it can "learn" the light and dark conditions required, compute the most accurate setting for recognizing the difference in received light signals, and self-program that setting, all with the push of a single button. Simply push the button once with the sensor pointed at the "on" condition, and once with it pointed at the "off" condition. Available with red, green, blue and white convergent LEDs, MINI-BEAM *Expert* sensors can solve numerous color registration mark sensing applications. The fiber optic, visible green LED model optically improves sensing contrast, especially with translucent materials. These DC sensors feature Banner's exclusive, patented Alignment Indicating Device (AID™) which lights an LED whenever the sensor sees a light condition and pulses it at a rate proportional to the received light signal. These sensors are huge performers relative to their small size and price, and can be used with both glass and plastic fiber optics. They are rated NEMA 1, 2, 3, 4, 4X, 6, 12 and 13, and IP67.

See page 15 for model selection.





D11 & D11 *Expert*™:
Compact, DIN-rail-mountable fiber optic sensors.

With available red, green, blue, and white convergent LED's, D11 fiber optic sensors provide powerful, compact, DIN-rail-mountable options for sensing and registration control. They are low-cost, high-power, plastic fiber optic sensors with fast 0.2 to 0.5 ms response time, depending on model. These compact, totally self-contained, visible beam sensors operate from 10 to 30V dc. High-performance, D11 *Expert* models feature push-button programming to "teach" dark and light sensing conditions in low-contrast applications. D11 standard units feature a 15-turn sensitivity adjustment. LEDs indicate POWER ON and OUTPUT ON, and flash to warn of problems including overloaded output and marginal excess gain. They feature overload, shorted load and low voltage protection, and automatically reset when the problem is cleared. Complementary normally-open and normally-closed outputs are each capable of switching 150 milliamps. The normally-closed output can be wired as a marginal excess gain alarm output. Choose from NPN (sinking) or PNP (sourcing) models with an integral 2 m (6.5') cable or Pico-style quick disconnect. An optional 9 m (30') cable is also available. Standard D11 shown.

See page 16 for model selection.

SL & SLE Series:
Opposed mode sensors for reliable through-the-web sensing.

Standard SL and SL *Expert*™ (SLE) slot sensors are self-contained, opposed mode emitter-receiver pairs in a rugged U-shaped ("fork") housing. Available with a choice of 10 mm (0.4") or 30 mm (1.2") sensing slot, they are ideal for ultra-reliable color registration mark sensing through a continuous transparent or opaque web. Contained in a single housing, these units offer easy installation with no sensor alignment required. A molded-in arrow on the emitter side of the housing and slot on the receiver side show beam position at a glance for faster, more reliable installation. The SL models feature a four-turn, clutched sensitivity potentiometer to simplify setups. For even easier setup, the micro-processor-based SLE sensors feature single-button TEACH programming for optimal sensing adjustments that can be programmed from the sensor or remotely; or even while products are in motion (dynamic TEACH). SL and SLE sensors feature a high-power, visible red sensing beam that "burns" through dust, dirt, vapors, smoke, and other contaminants, allowing them to work in extremely contaminated environments. These versatile slot sensors can be configured for either light-operate or dark-operate applications. They operate from 10 to 30V dc and offer bipolar NPN (sinking) and PNP (sourcing) outputs, which handle 150 mA maximum load each. Green and yellow LEDs on both models indicate POWER ON, LIGHT SEEN, and MARGINAL EXCESS GAIN (less than 1.5) in the light condition, keeping you constantly informed of operating status.

See page 17 for model selection.



Label sensor for "no-optical-contrast" applications.



SLC1 Series Label Sensor: A high-speed, high-precision solution with no adjustments.

The smart, yet simple, microprocessor-based, SLC1 uses Banner's own Adaptive Digital Logic (ADL™)* system for the easiest setups. ADL enables the sensor to "learn" label characteristics in just 250 milliseconds or the passing of four labels, and provides continuous automatic adjustment of sensing threshold and drift compensation for maximum sensing precision. The SLC1 is an excellent solution for label-registering applications and label-counting tasks in slitting or rewinding applications. And it's extremely easy to use! You simply place the label web in the sensing slot location marked "sensing area," and allow the labels to run through the sensor; no programming or adjustments required. The SLC1 has a maximum label counting speed of 10 m (33') per second. And it's extremely precise, providing a typical registration accuracy of ± 0.3 mm (0.012") at web speeds up to 1.5 m (60") per second.

**Patent pending.*

See page 16 for model selection.

Color Mark Sensor Applications

WEB PRINTING PRESS APPLICATIONS

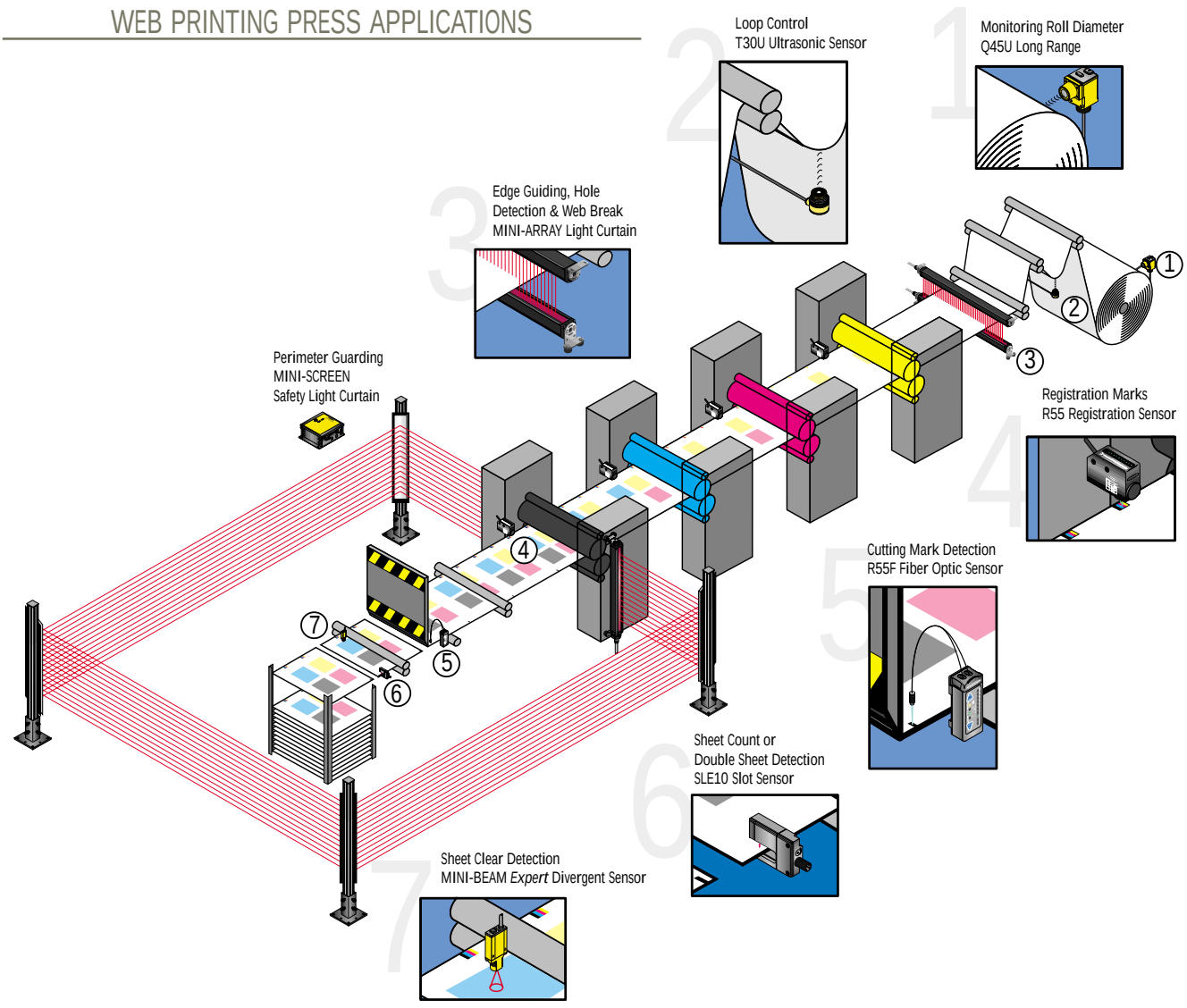

PRODUCT ORIENTATION

Objective: To position all bottles in the same orientation for label application.

Sensor: **R55ECGW1**

Operation: Automated packaging often requires products to be oriented in a particular position. An inconspicuous color mark can be included on a product to provide a point of reference. The R55E color mark sensor is able to reliably detect very small color marks and small color contrasts. Here, the R55E senses a color mark printed on the rear seam of the foil top wrap.

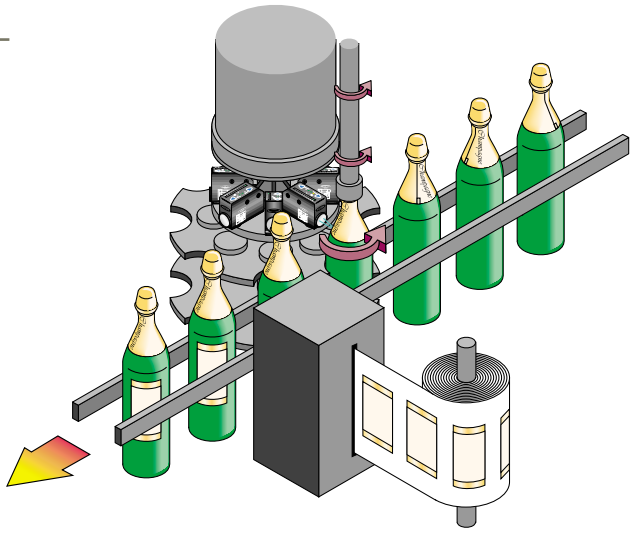

Color Mark Sensor Applications

PRINT VERIFICATION

Objective: To detect presence or absence of information printed on a small object.

Sensor: **R55FPG** & **D11EN6FP**

Fibers: **PBCT26U** & **PIA26U** (pair)

Operation: An R55F Series sensor is used with model PBCT26U plastic fiber optic cable and model L4C6 lens to inspect for small white printing on integrated circuits. The R55F is a "teach mode" sensor that "learns" the difference between the presence and absence of the printing, using push-button programming. The convergent lens is located 6 mm (0.24") away from the surface of the I.C. The D11E uses individual plastic fibers in the opposed sensing mode to gate the inspection sensor to check for the printing when the leading edge of the I.C. is sensed.

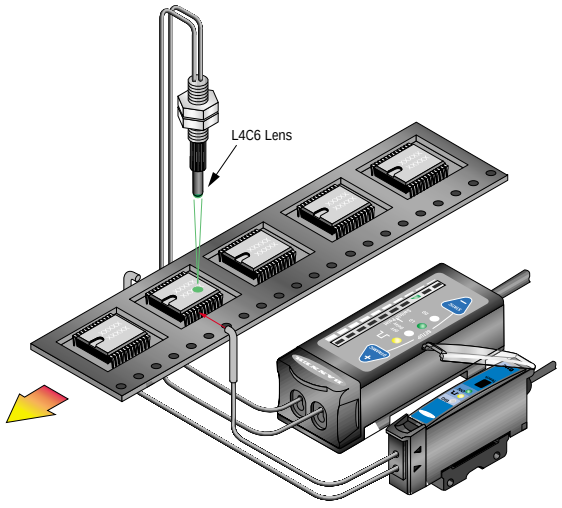

TAMPER-PROOF SEAL

Objective: To accurately sense the leading (or trailing) edge of clear safety seals for application over bottle caps.

Sensor: **SLC1BB6**

Operation: The SLC1 Label Sensor reliably detects the presence of most label types, including clear labels on either opaque or clear backing. Registration accuracy of ±0.3 mm (0.012") is typical at label web speeds of up to 1.5 m (60") per second. The sensor's Adaptive Digital Logic* (ADL™) provides self-learning capability. The SLC1 also provides continuous automatic internal adjustment of sensing threshold and drift compensation.

**Patent pending.*

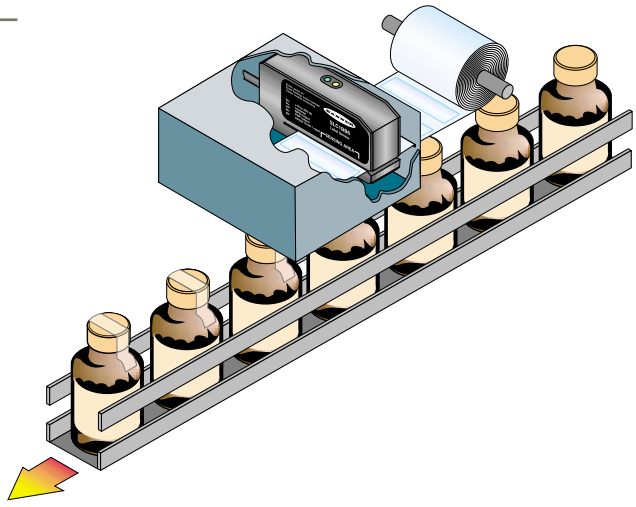

WEB CUTOFF REGISTRATION

Objective: To detect a color mark printed on a continuous web for accurate control of downstream cutoff.

Sensor: **SME312CVB**

Operation: MINI-BEAM model SME312CVB is a blue LED convergent sensor which reliably detects many difficult color mark contrasts, such as yellow against off-white (shown here). The sensor is located near the printing drum, where web "flutter" is not a factor. The MINI-BEAM should be mounted at a 15 degree "skew" angle from perpendicular to sense shiny or clear webs in order to avoid a strong direct reflection of the sensing beam. Banner offers sensors with blue, green, red, or white light sources for handling specific color contrasts.

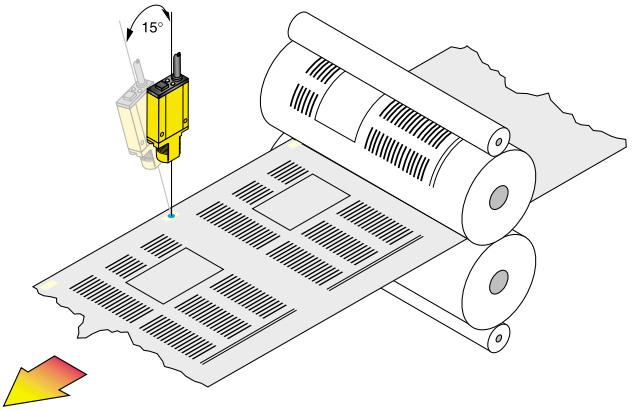

Color Mark Sensors Selection Charts

Why a single LED color mark sensor is the best solution.

All photoelectric color mark sensors are in essence "contrast detectors." Each sensor responds to different levels of light that are reflected back as monochromatic "shades of gray." Because each color mark and background color combination responds best to a specific LED color, a single monochromatic LED sensor is your best choice when combined with the latest microprocessor-based sensor technology. By choosing an optimized monochromatic color mark sensor, you will save significant costs and get a more dependable and dedicated sensor that is less likely to require maintenance or replacement.

Choosing the best LED color for your color mark application.

1. Examine your color mark and background, and select the Banner reference colors (BRCs) on the chart that best match your colors.
2. On the chart, line up the BRCs for color mark and background colors.
3. Refer to the colored boxes that correspond to the LED colors available: red, green, white and blue.
4. Pick the most effective LED color according to the numerical rank representing 1st, 2nd, 3rd and 4th best choice. As the chart indicates, some LED colors are equally effective for certain color combinations.

Which colors does each LED see?

The charts below show you how each LED color sees specific colors. Different color LEDs see each color in varying "shades of gray." These charts provide an additional tool to help you pick the best LED color.

Reference No.		BRC01	BRC02	BRC03	BRC04	BRC05
Reference Color						
MARK COLOR	BRC01		1 2 3	1 2 3	1 2 3 4	1 2 3
	BRC02	1 2 3		1 2	1 2 3 4	1 2 3
	BRC03	1 2 3	1 2		1 2 3 4	1 2 3
	BRC04	1 2 3 4	1 2 3 4	1 2 3 4		1 2 2 3
	BRC05	1 2 3	1 2 3	1 2 3	1 2 2 3	
	BRC06	1 2 3 4	1 2	1 2 3 4	1 2 2	1 2
	BRC07	1	1 2 3	1 2	1 2 3	1 2
	BRC08	1 2 3	1 2 2	1	1 2 3 4	1 2 3 4
	BRC09	1 2 3	1 2	1	1 2 2 3	1 2 3 4
	BRC10	1 2 3	1	1	1 2 3 4	1 2 3
	BRC11	1 2 3	1 2	1 2 3	1 2	1 2 3
	BRC12	1 2 3	1 2 3	1 2 3	1 2 3 4	1 2
	White	1 2 3 4	1 2 3	1 2 2	1 2 3 4	1 2 3 4

Your actual color.

This chart shows the actual colors used in the Banner Reference Color Card. Various screens or tints of the colors are shown as percentages running down the vertical column. In a perfect world, **white** LED sensors would see the colors exactly as you see them in this chart, but for now the intensity of the light produced by white LEDs is not yet high enough to accomplish this task. White LED sensors are an excellent choice for general mid-level contrast applications, especially black and red color combinations.



What the Green LED detects.

The green LED is the best overall choice for general use and the most sensitive to a variety of color combinations. It sees all colors in the spectrum and is also able to see lighter tints of all colors.

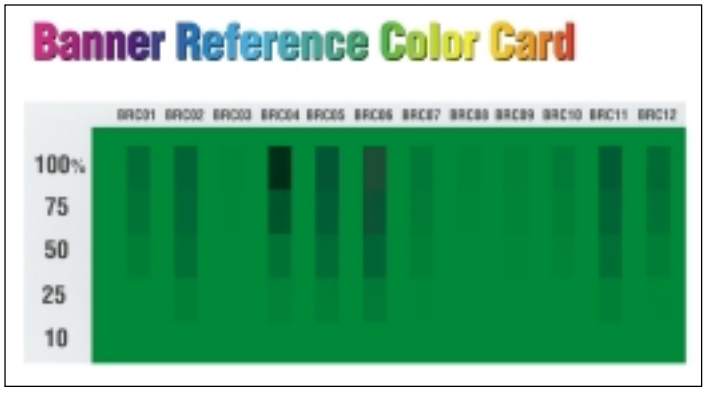

NOTE: Test results from R55F glass fiber unit using a BT23S fiber optic assembly offset at 15° at a distance of 5 mm (0.2") from the substrate.

☐ Red LED-based sensor ☐ Green LED-based sensor ☐ White LED-based sensor ☐ Blue LED-based sensor

BACKGROUND COLOR

BRC06	BRC07	BRC08	BRC09	BRC10	BRC11	BRC12	White	Reference No.	Reference Color	MARK COLOR
1 2 3 4	1	1 2 3	1 2 3	1 2 3	1 2 3	1 2 3	1 2 3 4		BRC01	
1 2	1 2 3	1 2 2	1 2	1	1 2	1 2 3	1 2 3		BRC02	
1 2 3 4	1 2	1	1	1	1 2 3	1 2 3	1 2 2		BRC03	
1 2 2	1 2 3	1 2 3 4	1 2 2 3	1 2 3 4	1 2	1 2 3 4	1 2 3 4		BRC04	
1 2	1 2	1 2 3 4	1 2 3 4	1 2 3	1 2 3	1 2	1 2 3 4		BRC05	
	1 2 3 4	1 2 3	1 2 2 3	1 2 3	1 2 3 4	1 2 3 4	1 2 3 4		BRC06	
1 2 3 4		1 2 3	1 2 3	1 2	1 2 3 4	1 2 3	1 2 3 4		BRC07	
1 2 3	1 2 3		1	1 2	1 2 3	1 2 3 4	1 2 3		BRC08	
1 2 2 3	1 2 3	1		1	1 2 3	1 2 3 3	1 2 3		BRC09	
1 2 3	1 2	1 2	1		1 2	1	1 2 3		BRC10	
1 2 3 4	1 2 3 4	1 2 3	1 2 3	1 2		1 2 3	1 2 3		BRC11	
1 2 3 4	1 2 3	1 2 3 4	1 2 3 3	1	1 2 3		1 2 3 4		BRC12	
1 2 3 4	1 2 3 4	1 2 3	1 2 3	1 2 3	1 2 3	1 2 3 4			White	

What the Blue LED detects.

The blue LED offers the best detection of the lightest shaded colors and tints. It is particularly effective for pastel colors. It is the most effective choice for the most difficult color combinations such as 20% yellow on newsprint.

What the Red LED detects.

The red LED has been used the longest for color mark applications. It is the most common and most accepted. As the chart below shows, it is extremely effective for certain colors and provides the highest contrast for these colors.





R55F Series Fiber Optic Color Mark Sensors

☐ Red LED ☐ Green LED ☐ White LED ☐ Blue LED

Model Number	Fiber Interface	Cable*	Supply Voltage	Output Type	Output Rating	Response	Repeatability
R55FV **R55FP**	Glass Plastic	2 m (6.5')	10 to 30V dc	Bipolar - NPN/PNP	150 mA maximum	50µs on/off	25µs
R55FVG **R55FPG**	Glass Plastic						
R55FVW **R55FPW**	Glass Plastic						
R55FVB **R55FPB**	Glass Plastic						

*Two additional options available: For models with integral 5-pin Euro-style quick-disconnect fitting, add suffix "Q" to model number. (i.e. R55FVQ)
For models with an attached 9 m (30') cable, add suffix w/30 to model number. (i.e. R55FVw/30)

R55F with cable

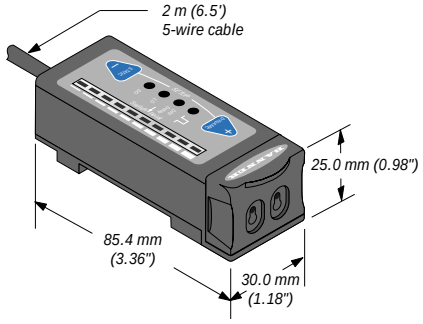

R55F with QD

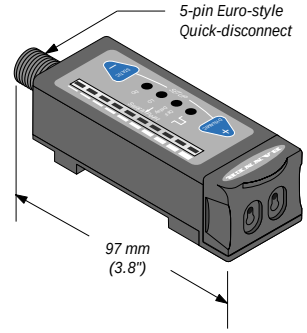

R55E *Expert*™ Series Color Mark Sensors

☐ Green LED ☐ White LED ☐ Blue LED

Model Number	Spot Orientation	Cable*	Supply Voltage	Output Type	Output Rating	Response	Repeatability
R55ECG1 **R55ECG2**	Parallel to body Perpendicular to body	2 m (6.5')	10 to 30V dc	Bipolar - 1 NPN, 1 PNP & 0 to 10mA Analog	150 mA maximum	50µs on/off	25µs
R55ECW1 **R55ECW2**	Parallel to body Perpendicular to body						
R55ECB1 **R55ECB2**	Parallel to body Perpendicular to body						

*Two additional options available: For models with integral 6-pin Euro-style quick-disconnect fitting add suffix "Q" to model number. (i.e. R55ECG1Q)
For models with an attached 9m (30') cable add suffix w/30 to model number. (i.e. R55ECG1w/30)

R55 Series Color Mark Sensors

☐ Green LED ☐ White LED ☐ Blue LED

Model Number	Spot Orientation	Cable*	Supply Voltage	Output Type	Output Rating	Response	Repeatability
R55CG1 **R55CG2**	Parallel to body Perpendicular to body	Attached 2 m (6') cable	10 to 30V dc	Bipolar - 1 NPN, 1 PNP & 0 to 10mA Analog	150 mA maximum	50µs on/off	25µs
R55CW1 **R55CW2**	Parallel to body Perpendicular to body						
R55CB1 **R55CB2**	Parallel to body Perpendicular to body						

*Three additional options available: For models with integral 5-pin Euro-style quick-disconnect fitting, add suffix "Q" to model number. (i.e. R55CG1Q)
For models with a 300 mm (12") pigtail 5-pin Euro-style quick-disconnect fitting, add suffix "QP" to model number. (i.e. R55CG1QP)
For models with an attached 9 m (30') cable, add suffix w/30 to model number. (i.e. R55CG1w/30)

R55E & R55 with cable

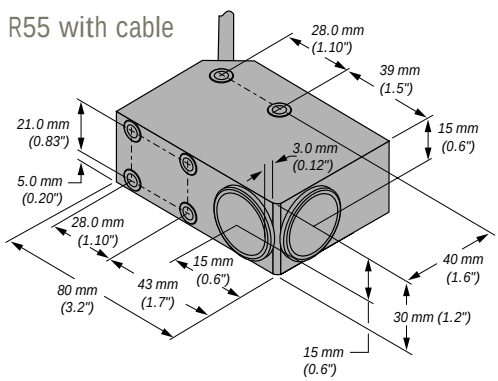

R55E & R55 with QD

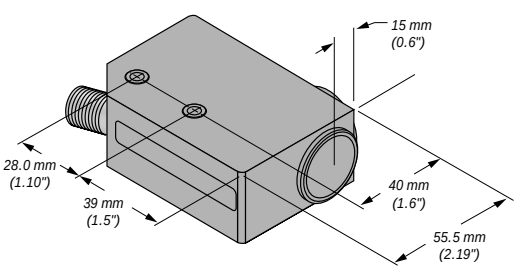

MINI-BEAM® *Expert*™ Color Mark Sensors

Red LED Green LED White LED Blue LED

Model Number	Model Style	Cable*	Supply Voltage	Output Type	Output Rating	Response	Repeatability
SME312CV	16 mm Convergent	Attached 2 m (6') cable	10 to 30V dc	Bipolar - 1 NPN, 1 PNP	100 mA maximum	500µs	100µs
SME312CV2	43 mm Convergent						
SME312CVG	16 mm Convergent						
SME312CVW	16 mm Convergent						
SME312CVB	16 mm Convergent						
SME312FV	Glass Fiber Optic						
SME312FP	Plastic Fiber Optic						
SME312FVG	Glass Fiber Optic						
SME312FPG	Plastic Fiber Optic						
SME312FVW	Glass Fiber Optic						
SME312FPW	Plastic Fiber Optic						
SME312FVB	Glass Fiber Optic						
SME312FPB	Plastic Fiber Optic						

*Two additional options available: For models with integral 5-pin Euro-style quick-disconnect fitting, add suffix "QD" to model number. (i.e. SME312CVQD)
For models with an attached 9 m (30') cable, add suffix w/30 to model number. (i.e. SME312CVw/30)

Convergent Mode Models*

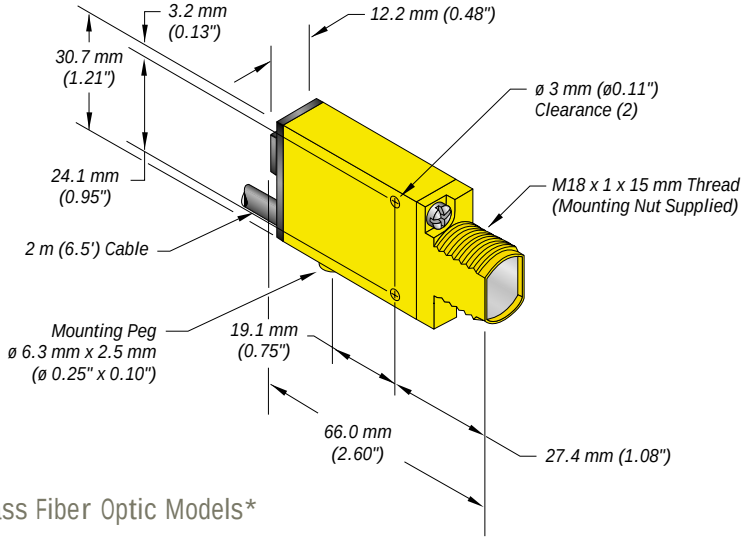

Plastic Fiber Optic Models*

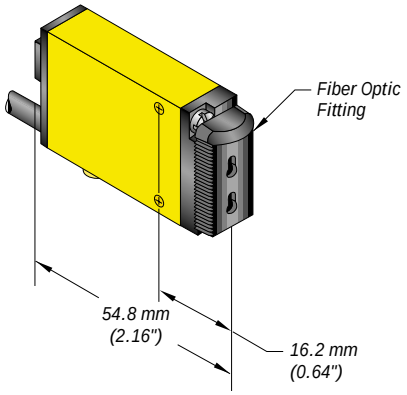

Glass Fiber Optic Models*

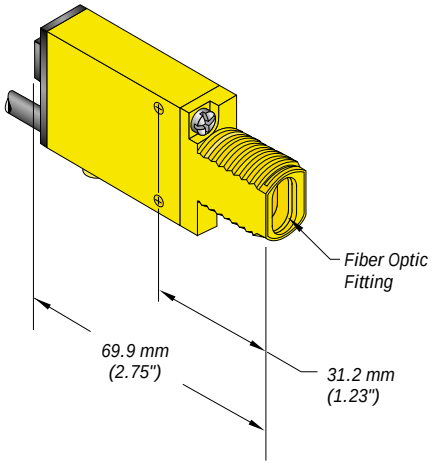

QD Dimensions, All Models

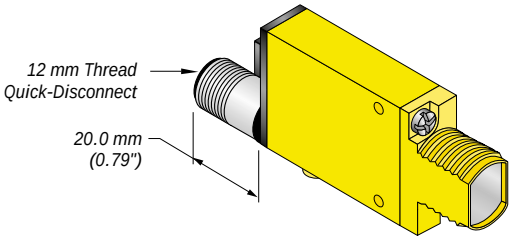

*See drawing for dimensions of Quick-Disconnect option.

D11 & D11E Fiber Optic Color Mark Sensors

☐ Red LED ☐ Green LED ☐ White LED ☐ Blue LED

Model Number	Model Style	Cable*	Supply Voltage	Output Type	Output Rating	Response	Repeatability
D11SN6FP	Standard	Attached 2 m (6') cable	10 to 30V dc	Complementary NPN - 1 n/o, 1 n/c	150 mA maximum	500µs on/off	160µs
D11ESN6FP	*Expert*			NPN programmable for l/o or d/o		200µs on/off	65µs
D11SP6FP	Standard			Complementary PNP - 1 n/o, 1 n/c		500µs on/off	160µs
D11ESP6FP	*Expert*			PNP programmable for l/o or d/o		200µs on/off	65µs
D11SN6FPG	Standard			Complementary NPN - 1 n/o, 1 n/c		500µs on/off	160µs
D11ESN6FPG	*Expert*			NPN programmable for l/o or d/o		200µs on/off	65µs
D11SP6FPG	Standard			Complementary PNP - 1 n/o, 1 n/c		500µs on/off	160µs
D11ESP6FPG	*Expert*			PNP programmable for l/o or d/o		200µs on/off	65µs
D11SN6FPW	Standard			Complementary NPN - 1 n/o, 1 n/c		500µs on/off	160µs
D11ESN6FPW	*Expert*			NPN programmable for l/o or d/o		200µs on/off	65µs
D11SP6FPW	Standard			Complementary PNP - 1 n/o, 1 n/c		500µs on/off	160µs
D11ESP6FPW	*Expert*			PNP programmable for l/o or d/o		200µs on/off	65µs
D11SN6FPB	Standard			Complementary NPN - 1 n/o, 1 n/c		500µs on/off	160µs
D11ESN6FPB	*Expert*			NPN programmable for l/o or d/o		200µs on/off	65µs
D11SP6FPB	Standard			Complementary PNP - 1 n/o, 1 n/c		500µs on/off	160µs
D11ESP6FPB	*Expert*			PNP programmable for l/o or d/o		200µs on/off	65µs

*Two additional options available: For models with integral 4-pin Pico-style quick-disconnect fitting add suffix "Q" to model number. (i.e. D11SN6FPQ)
For models with an attached 9 m (30') cable add suffix w/30 to model number. (i.e. D11SN6FPw/30)

D11 & D11E with cable

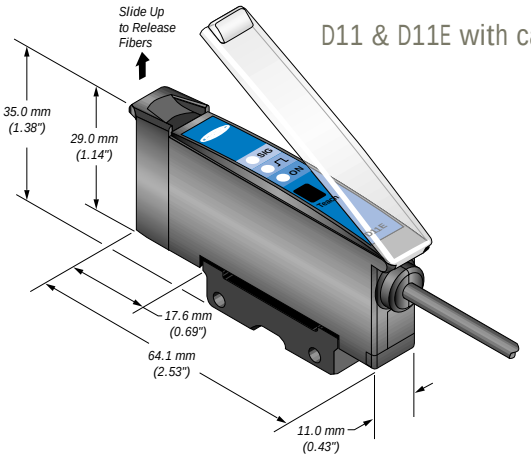

D11 & D11E with QD

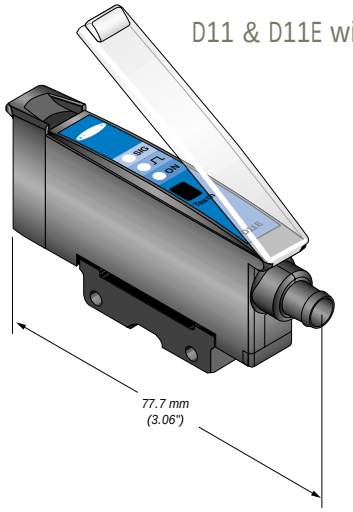

SLC1 Series Label Sensors

Model Number	Slot Width	Model Style	Cable	Supply Voltage	Output Type	Output Rating	Maximum Web Speed
SLC1BB6 **SLC1BB6w/30** **SLC1BB6Q**	1 mm Slot	ADL - Self Teach	Attached 2 m (6') cable Attached 9 m (30') cable 5-pin Euro-style QD	10 to 30V dc	Bipolar - 1 NPN, 1 PNP	150 mA maximum	10 m (33') per second

SLC1 with cable

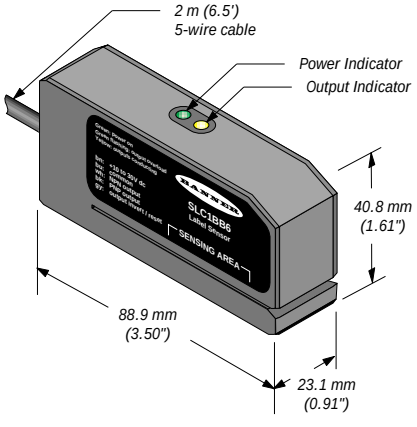

SLC1 with QD

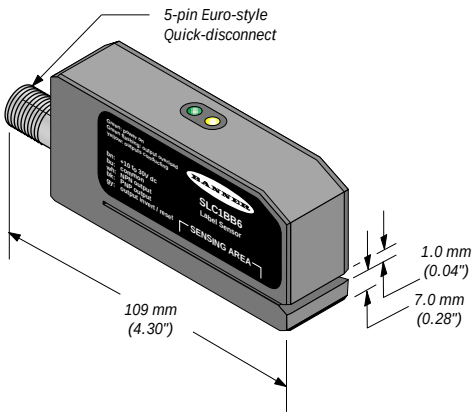

SL & SLE *Expert*™ Series Opposed-mode Sensors for Color Mark Sensing Applications

Model Number	Slot Width	Model Style	Cable*	Supply Voltage	Output Type	Output Rating	Response	Repeatability
SL10VB6V	10 mm Slot	Standard	Attached 2 m (6') cable	10 to 30V dc	Bipolar - 1 NPN, 1 PNP	150 mA maximum	1 millisecond	250µs
SL10VB6VY		Standard - High Speed					300µs	75µs
SLE10B6V		*Expert*					500µs	100µs
SLE10B6VY		*Expert* - High Speed					150µs	75µs
SL30VB6V	30 mm Slot	Standard					1 millisecond	250µs
SL30VB6VY		Standard - High Speed					300µs	75µs
SLE30B6V		*Expert*					500µs	100µs
SLE30B6VY		*Expert* - High Speed					150µs	75µs

*Two additional options available: For models with integral 5-pin Euro-style quick-disconnect fitting, add suffix "Q" to model number. (i.e. SL10VB6VQ)
For models with an attached 9 m (30') cable, add suffix w/30 to model number. (i.e. SL10VB6Vw/30)

SL10 with cable

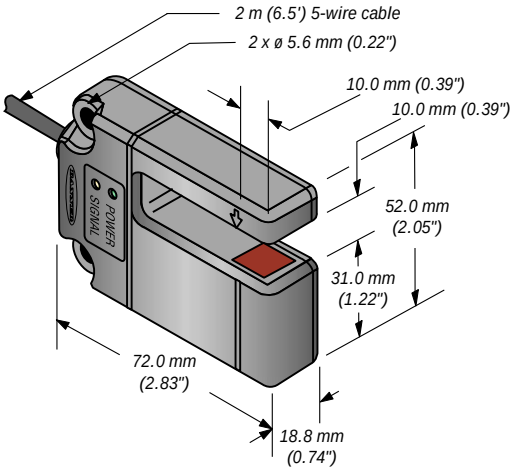

SL10 with QD

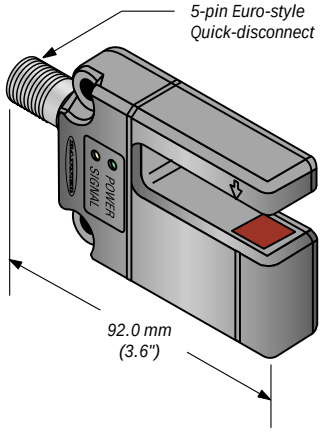

SL30 with cable

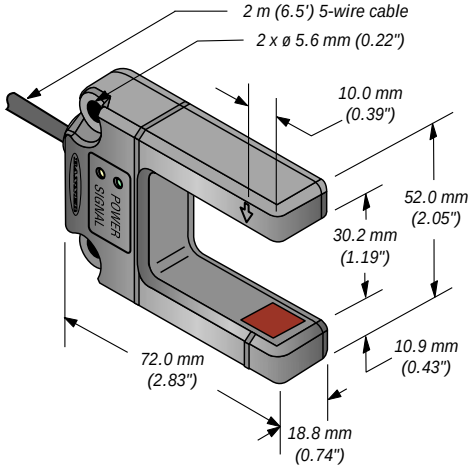

SL30 with QD

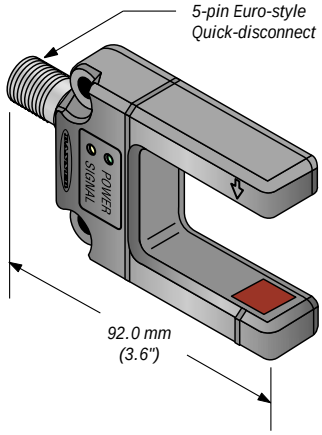

Glass & plastic fibers: An unmatched selection of standard and custom designs.

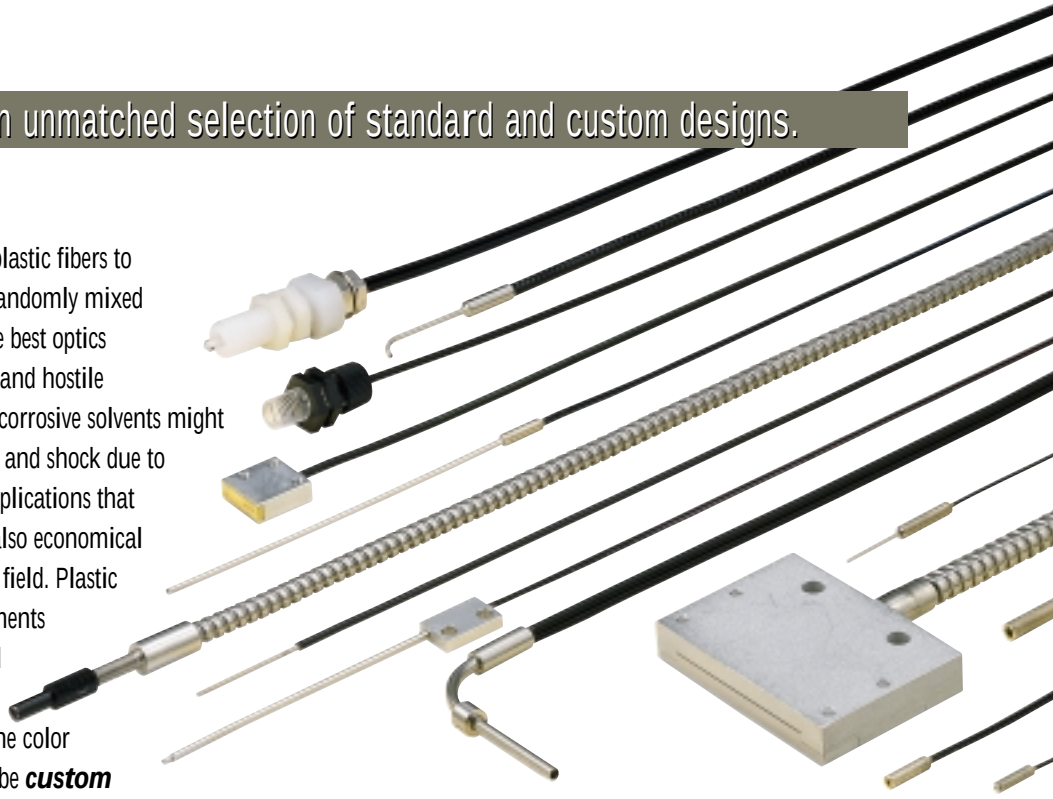

The broadest line.

Banner has the largest selection of glass and plastic fibers to solve your color mark sensing applications. Randomly mixed bifurcated glass fiber optic bundles provide the best optics for color mark sensing. Glass fibers can withstand hostile environments, such as those where caustic or corrosive solvents might be present, and can tolerate extreme vibration and shock due to their low mass. Plastic fibers are perfect for applications that require flexing or repeated motion. They are also economical and can be easily cut to desired lengths in the field. Plastic fiber assemblies with coaxial bundle arrangements allow for simple installation, without the need for alignment of the emitter and receiver elements relative to the direction of travel of the color marks. Both glass and plastic fiber optics can be ***custom designed*** to fit the mounting and/or space constraints of your application. Contact your Banner Applications Engineer for details.

For use with:

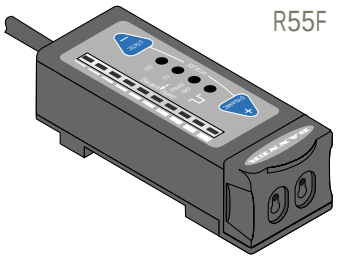

R55F

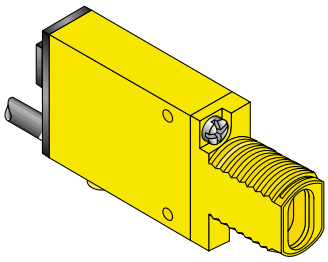

SME312F

Glass Fiber Optic Specifications.

- Standard cable length is 610 mm (24") or 915 mm (36").
- All models available with either 302 stainless steel sheathing (shown on the following pages) or PVC with monocoil reinforcing wire.
- Threaded brass endtips may be changed to stainless steel by adding the suffix "MSS" (i.e. BT23SMSS).
- Fiber assemblies constructed with stainless steel sheathing and metal endtips can withstand temperatures from -140° to 249°C (-220° to 480°F).
- Fiber assemblies constructed with PVC sheathing and/or plastic endtips can withstand temperatures from -40° to 105°C (-40° to 220°F).

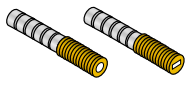

Straight threaded tip.

Model Number	Tip Material	Bundle Size	Cable Length	Spot Shape	Orientation/Size*
BT23S*	5/16 x 24 Brass Thread	3.2 mm (0.125")	915 mm (3')	Circular	○ ○ ○ ○ ○
BTR.753S	5/16 x 24 Brass Thread	0.5 mm x 2.5 mm (0.020" x 0.100")	915 mm (3')	Rectangular	▭

*Circular spot shape models available in the following bundle diameters: 3.2 mm (0.125"), 4.0 mm (0.156"), 2.3 mm (0.090"), 1.6 mm (0.062"), and 1.2 mm (0.046").

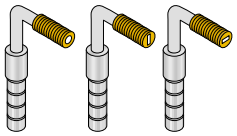

90° angled with threaded tip.

Model Number	Tip Material	Bundle Size	Cable Length	Spot Shape	Orientation/Size*
BAT23S*	Stainless Steel 90° Angle 5/16 x 24 Brass Thread	3.2 mm (0.125")	915 mm (3')	Circular	○ ○ ○ ◯ ◯
BATR.753S	Stainless Steel 90° Angle 5/16 x 24 Brass Thread	0.5 mm x 2.5 mm (0.020" x 0.100")	915 mm (3')	Rectangular, Transverse	▯
BATR.753SMRA	Stainless Steel 90° Angle 5/16 x 24 Brass Thread	0.5 mm x 2.5 mm (0.020" x 0.100")	915 mm (3')	Rectangular, Parallel	▭

*Circular spot shape models available in the following bundle diameters: 3.2 mm (0.125"), 4.0 mm (0.156"), 2.3 mm (0.090"), 1.6 mm (0.062"), and 1.2 mm (0.046").

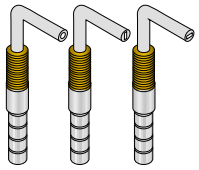

90° angled tip with threaded base.

Model Number	Tip Material	Bundle Size	Cable Length	Spot Shape	Orientation/Size*
BTA23S*	Stainless Steel 90° Angle 5/16 x 24 Brass Thread	3.2 mm (0.125")	915 mm (3')	Circular	○ ○ ○ ◯ ◯
BTAR.753S	Stainless Steel 90° Angle 5/16 x 24 Brass Thread	0.5 mm x 2.5 mm (0.020" x 0.100")	915 mm (3')	Rectangular, Transverse	▯
BTAR.753SMRA	Stainless Steel 90° Angle 5/16 x 24 Brass Thread	0.5 mm x 2.5 mm (0.020" x 0.100")	915 mm (3')	Rectangular, Parallel	▭

*Circular spot shape models available in the following bundle diameters: 3.2 mm (0.125"), 4.0 mm (0.156"), 2.3 mm (0.090"), 1.6 mm (0.062"), and 1.2 mm (0.046").

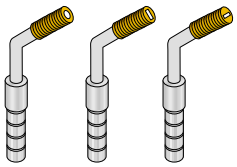

45° angled with brass threaded tip.

Model Number	Tip Material	Bundle Size	Cable Length	Spot Shape	Orientation/Size*
BHAT23S*	Stainless Steel 45° Angle 5/16 x 24 Brass Thread	3.2 mm (0.125")	915 mm (3')	Circular	○ ○ ○ ◯ ◯
BHAT.753S	Stainless Steel 45° Angle 5/16 x 24 Brass Thread	0.5 mm x 2.5 mm (0.020" x 0.100")	915 mm (3')	Rectangular, Transverse	▯
BHAT.753SMRA	Stainless Steel 45° Angle 5/16 x 24 Brass Thread	0.5 mm x 2.5 mm (0.020" x 0.100")	915 mm (3')	Rectangular, Parallel	▭

*Circular spot shape models available in the following bundle diameters: 3.2 mm (0.125"), 4.0 mm (0.156"), 2.3 mm (0.090"), 1.6 mm (0.062"), and 1.2 mm (0.046").

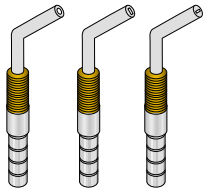

45° angled tip with threaded base.

Model Number	Tip Material	Bundle Size	Cable Length	Spot Shape	Orientation/Size*
BTHA23S*	Stainless Steel 45° Angle 5/16 x 24 Brass Thread	3.2 mm (0.125")	915 mm (3')	Circular	○ ○ ○ ◯ ◯
BTHAR.753S	Stainless Steel 45° Angle 5/16 x 24 Brass Thread	0.5 mm x 2.5 mm (0.020" x 0.100")	915 mm (3')	Rectangular, Transverse	▯
BTHAR.753SMRA	Stainless Steel 45° Angle 5/16 x 24 Brass Thread	0.5 mm x 2.5 mm (0.020" x 0.100")	915 mm (3')	Rectangular, Parallel	▭

*Circular spot shape models available in the following bundle diameters: 3.2 mm (0.125"), 4.0 mm (0.156"), 2.3 mm (0.090"), 1.6 mm (0.062"), and 1.2 mm (0.046").

90° tight angled tip.

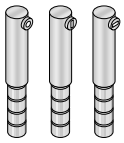

Model Number	Tip Material	Bundle Size	Cable Length	Spot Shape	Orientation
BA1.53SMTA	Stainless Steel 90° Tight Angle	2.3 mm (0.090")	915 mm (3')	Circular	○
BAR.753SMTA	Stainless Steel 90° Tight Angle	0.5 mm x 2.5 mm (0.020" x 0.100")	915 mm (3')	Rectangular, Parallel	▯
BAR.753SMTAMRA	Stainless Steel 90° Tight Angle	0.5 mm x 2.5 mm (0.020" x 0.100")	915 mm (3')	Rectangular, Transverse	▭

90° extra tight angled tip.

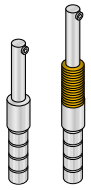

Model Number	Tip Material	Bundle Size	Cable Length	Spot Shape	Orientation
BA1.53SMETA	Stainless Steel 90° Extra Tight Angle	2.3 mm (0.090")	915 mm (3')	Circular	○
BTETA1.53S	Stainless Steel 90° Extra Tight Angle, 5/16 x 24 Brass Thread	2.3 mm (0.090")	915 mm (3')	Circular	○

Rectangular tip.

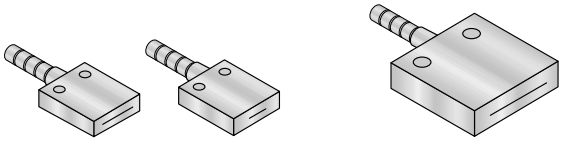

Model Number	Tip Material	Bundle Size	Cable Length	Spot Shape	Orientation
BR13S	Plastic	0.5 mm x 3.9 mm (0.020" x 0.154")	915 mm (3')	Rectangular	▭
BR23S	Plastic	0.8 mm x 9.7 mm (0.032" x 0.382")	915 mm (3')	Rectangular	▭
BR2.53S	Aluminum	0.25 mm x 38 mm (0.010" x 1.5")	915 mm (3')	Rectangular	▭

Glass lens assembly, Model L10.

This convergent glass lens with anodized red aluminum housing is used with 5/16-24 threaded tip bifurcated fibers and focuses the light to a point as small as 0.8 mm (0.03") when used with a 1.5 mm (0.06") diameter fiber bundle. Maximum temperature is 600°F (315°C).

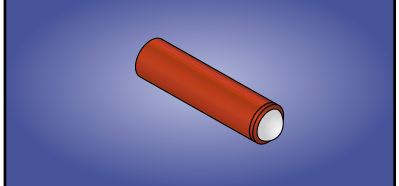

Mounting bracket, Model SMBF.

Right angle bracket for glass fiber optics with 5/16-24 threaded tip. 18-gauge stainless steel.

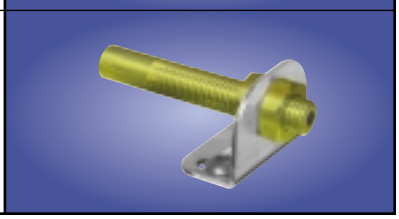

Banner Plastic Fiber Optic Assemblies

For use with:

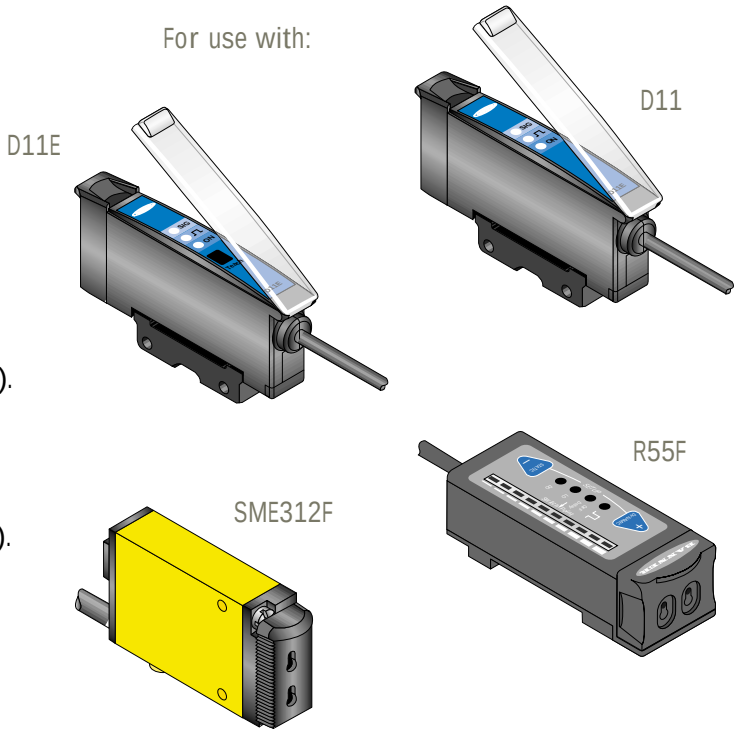

Plastic Fiber Optic Specifications.

- Standard cable length is 2000 mm (79").
- Unterminated assemblies may be cut by the customer to the required length using the supplied cutter.
- Threaded nickel-plated brass endtips can be changed to stainless steel by adding the suffix "MSS" (i.e. PBT46UMSS).
- Plastic fiber assemblies may be subjected to temperatures within the -30° to 70°C (-20° to 158°F) range.
- Assemblies with "HF" suffix indicates DURA-BEND® high flexibility cable (1 mm minimum acceptable bend radius).

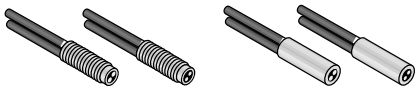

Straight threaded or smooth ferrule tip.

Model Number	Tip Material	Fiber Core Size	Cable Length	Spot Shape/Orientation
PBT46U	M6 x 0.75 Nickel-plated Brass Thread	1.0 mm (0.040")	2 m (6')	Circular
PBT46UHF (DURA-BEND®)	M6 x 0.75 Nickel-plated Brass Thread	1.0 mm (0.040")	2 m (6')	Circular
PBT66U	M6 x 0.75 Nickel-plated Brass Thread	1.5 mm (0.060")	2 m (6')	Circular
PBF46U	Stainless Steel	1.0 mm (0.040")	2 m (6')	Circular
PBF46UHF (DURA-BEND®)	Stainless Steel	1.0 mm (0.040")	2 m (6')	Circular
PBF66U	Stainless Steel	1.5 mm (0.060")	2 m (6')	Circular

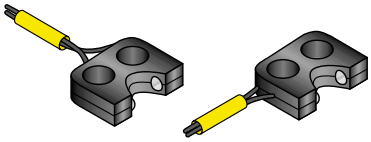

Convergent beam.

Model Number	Material	Fiber Core Size	Cable Length	Spot Shape/Orientation
P12-C1	Plastic	0.5 mm (0.020")	2 m (6')	Circular (Convergent)
P22-C1	Plastic	0.5 mm (0.020")	2 m (6')	Circular (Convergent)

Banner Plastic Fiber Optic Assemblies & Accessories

Regular tip.

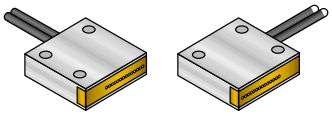

Model Number	Tip Material	Fiber Core Size	Cable Length	Spot Shape/Orientation
PBR1X326U	Aluminum with Brass Insert	32 x 0.25 mm	2 m (6')	Rectangular
PBRS1X326U	Aluminum with Brass Insert	32 x 0.25 mm	2 m (6')	Rectangular

Coaxial straight threaded or smooth ferruled tip.

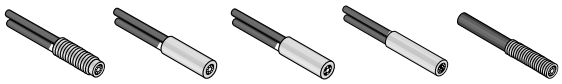

Model Number	Tip Material	Fiber Core Size	Cable Length	Spot Shape/Orientation
PBCT46U	M6 x 0.75 Nickel-plated Brass Thread	1.0 mm center 16 x 0.25 mm ring	2 m (6')	Circular/Coaxial
PBCF46U	Stainless Steel	1.0 mm center 16 x 0.25 mm ring	2 m (6')	Circular/Coaxial
PBCF21X46U	Stainless Steel	0.5 mm center 4 x 0.25 mm ring	2 m (6')	Circular/Coaxial
PBFM1X86T	Stainless Steel	8 x 0.25 mm	2 m (6')	Circular/Coaxial (D11 & D11E ONLY)
PBCT23T	M4 x 0.7 Stainless Steel Thread	0.5 mm center 9 x 0.25 mm ring	1 m (3')	Circular/Coaxial (D11 & D11E ONLY)

Slot-shaped through beam.

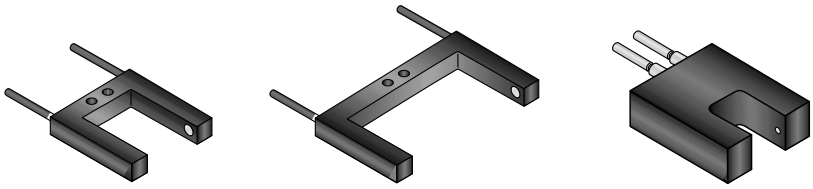

Model Number	Material	Fiber Core Size	Cable Length	Spot Shape/Orientation
PDIS46UM12	Plastic	1.0 mm (.040")	2 m (6')	Circular (Through Beam)
PDIS46UM32	Plastic	1.0 mm (.040")	2 m (6')	Circular (Through Beam)
PDIS4TM12	Plastic	1.0 mm (.040")	Direct Connection	Circular (D11 & D11E ONLY)

Plastic lens assembly, Model L4C6.

Convergent lens for use with Model PBCT23T fiber. Focal distance is 6 mm ±1 mm (0.24" ± 0.04"). Spot size is 0.25 mm (0.010"). The housing is made of anodized aluminum; the lens is acrylic. The temperature range is -40° to +70°C (-40° to 158°F).

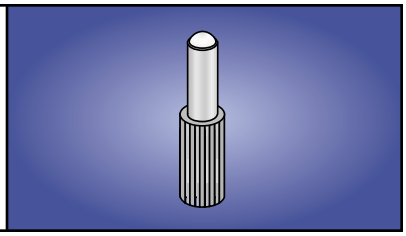

Banner Plastic Fiber Optic Accessories

Bracket for plastic fiber optics, Model SMBFP3. Right angle bracket for plastic fiber optics with M3 x 0.5 threaded tip. 18-gauge stainless steel construction.	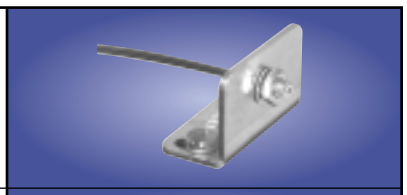
Bracket for plastic fiber optics, Model SMBFP4. Right angle bracket for plastic fiber optics with M4 x 0.7 threaded tip. 18-gauge stainless steel construction.	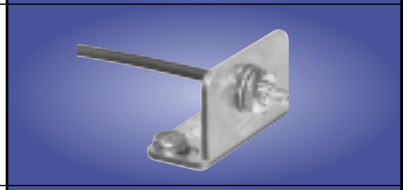
Bracket for plastic fiber optics, Model SMBFP4N. Low profile bracket for plastic fiber optics with M4 x 0.7 threaded tip. 18-gauge stainless steel construction.	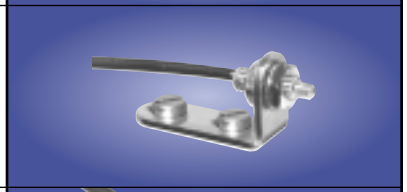
Bracket for plastic fiber optics, Model SMBFP6. Right angle bracket for plastic fiber optics with M6 x 0.75 threaded tip. 18-gauge stainless steel construction.	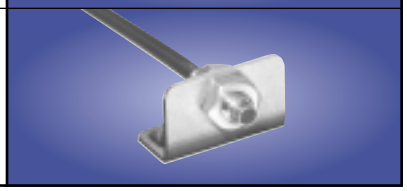

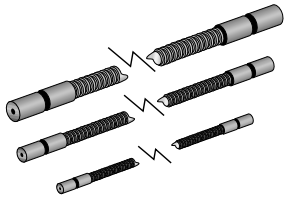

Protective field-installable stainless steel sheathing for plastic fibers.

Model Number	Sheathing Material	Compression Fitting	Length*	For Use With Fiber Type & Size
PFS69S6	Stainless Steel	Plastic	2 m (6')	Bifurcated 1 mm (0.04") or 1.5 mm (0.06") diameter core fibers
PFS53S6	Stainless Steel	Plastic	2 m (6')	Individual 1 mm (0.04") or 1.5 mm (0.06") diameter or bifurcated 0.25 mm (0.01") and 0.5 mm (0.02") diameter core fibers
PFS44S6	Stainless Steel	Plastic	2 m (6')	Individual 0.25 mm (0.01") and 0.5 mm (0.02") diameter core fibers

*Note: Other lengths available. Contact Banner Applications Department.

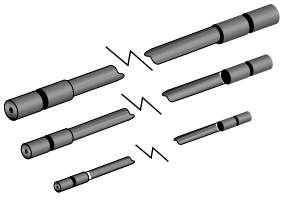

Protective field-installable PVC sheathing for plastic fibers.

Model Number	Sheathing Material	Compression Fitting	Length*	For Use With Fiber Type & Size
PFS95P6	PVC	Plastic	2 m (6')	Bifurcated 1 mm (0.04") or 1.5 mm (0.06") diameter core fibers
PFS64P6	PVC	Plastic	2 m (6')	Individual 1 mm (0.04") or 1.5 mm (0.06") diameter or bifurcated 0.25 mm (0.01") and 0.5 mm (0.02") diameter core fibers
PFS40P6	PVC	Plastic	2 m (6')	Individual 0.25 mm (0.01") and 0.5 mm (0.02") diameter core fibers

*Note: Other lengths available. Contact Banner Applications Department.

Banner: Industry's number one supplier of sensors & machine safety products.

When you buy your sensors and machine safety products from Banner, you gain the confidence of dealing with the largest, most knowledgeable and experienced sensor company. We have the broadest line of products and the most advanced manufacturing capabilities in the industry. We can handle any size order, large or small, utilizing the most advanced manufacturing capabilities. We can deliver any of more than 15,000 different products in just three days–most can ship within hours!

Just as important, we have the largest and most knowledgeable sales and support network, backed by the world's finest application engineers. With our global sales support network, we're close by wherever you're located, and we're ready to help you with your applications, plus give you excellent service support. When you add it up, you'll find the best value in Banner products.



The Banner Photoelectric Sensors Catalog



The industry's most complete catalog; more than 700 pages of detailed product and technical information on more than 12,000 photoelectric sensors.

Banner Measurement & Inspection Products Catalog



Advanced line of measurement and inspection products including laser displacement sensors, ultrasonic gauging sensors, camera-based sensors, measuring light screens, and more.

The Banner Machine Safety Products Catalog



A complete catalog of machine safety products including Banner's extensive line of safety light screens, safety interlock switches and E-stop safety modules.



Visit Banner On-Line at www.baneng.com

- Complete product information for:
  - Photoelectric sensors
  - Measurement and inspection sensors
  - Machine safety products
- Up-to-date "What's New" page.
- Complete descriptions for each product, with links to product data sheets and dimension drawings.
- Product catalogs, specifier's guides, and product brochures available for immediate download or email request.
- Documents available in multiple languages.



For more information or applications assistance:

Call 1.888.3.SENSOR (1.888.373.6767)



All Three Catalogs on One CD ROM

Get all three Banner catalogs on one easy-to-use CD ROM covering over 15,000 Banner photoelectric, measurement and inspection, and machine safety products. Includes selection charts, technical information, and glossaries. Call, write, or email for your copy today!

Worldwide Representation.

- Australia
- Argentina
- Austria
- Belgium
- Brazil
- Canada
- Chile
- China
- Colombia
- Costa Rica
- Czech Republic
- Denmark
- Egypt
- Estonia
- Finland
- France
- Germany
- Greece
- Hong Kong
- Hungary
- Iceland
- India
- Indonesia
- Ireland
- Israel
- Italy
- Japan
- Korea
- Latvia
- Lithuania
- Luxembourg
- Malaysia
- Mexico
- Netherlands
- New Zealand
- Norway
- Pakistan
- Peru
- Philippines
- Poland
- Portugal
- South Africa
- Russia/CIS
- Singapore
- Slovakia
- Spain
- Sweden
- Switzerland
- Taiwan
- Thailand
- Turkey
- United Kingdom
- Uruguay
- Venezuela

BANNER®
the photoelectric specialist

Banner Engineering Corporation, P.O. Box 9414, Minneapolis, MN 55440 U.S.A.
Phone 763.544.3164 Fax 763.544.3213 www.baneng.com Email: sensors@baneng.com

PRINTED IN U.S.A. Copyright, 2000 Banner Engineering Corp. P/N 60027