GEFRAN

LT
RECTILINEAR DISPLACEMENT TRANSDUCER



Main features

- *The transducer has been improved in order to guarantee greater reliability under all conditions*
- *A sturdier structure makes the LT series even stronger for applications with heavy vibration*
- *Installation is made simpler by the absence of electrical signal variation in output, outside the Theoretical Electrical Stroke*
- *The new grooves provide an excellent alternative to the usual system of fastening with brackets*
- *Ideal for applications on plastic injection presses, vertical presses, and on many other processing machines*

TECHNICAL DATA

Useful electrical stroke (C.E.U.)	from 50 to 1350 mm (for intermediate strokes see table "Electrical / Mechanical Data")
Independent linearity (within C.E.U.)	± 0.05%
Resolution	Infinite
Repeatability	0.01 mm
Electrical connections LTM LTH LTB LTF	4-pole connector DIN43650 3-pole connector 5-pole connector DIN43322 1 meter 3-pole shielded cable
Displacement speed	Standard ≤ 10 m/s
Protection level	IP60 (IP65 on request)
Life	> 25x10^6 m strokes, or > 100x10^6 maneuvers, whichever is less (within C.E.U.)
Displacement force	3,5N (typical) IP60 version 15N (typical) IP65 version
Vibrations	5...2000Hz, Amax =0.75 mm amax. = 20 g
Shock	50 g, 11ms.
Acceleration	200 m/s^2 max (20g)
Tolerance on resistance	± 20%
Recommended cursor current	< 0.1 μA
Maximum cursor current	10mA
Maximum applicable voltage	60V
Electrical isolation	>100MΩ at 500V=, 1bar, 2s
Dielectric strength	< 100μA at 500V~, 50Hz, 2s, 1bar
Dissipation at 40°C (0W at 120°C)	3W
Actual Temperature Coefficient of the output voltage	≤ 5 ppm/°C typical
Working temperature	-30...+100°C
Storage temperature	-50...+120°C
Material for transducer case	Anodised aluminium Nylon 66 G
Material for pull shaft	Stainless steel AISI 303
Mounting	Brackets with adjustable distance between centers or with M5 screw ISO4017-DIN933

MECHANICAL DIMENSIONS

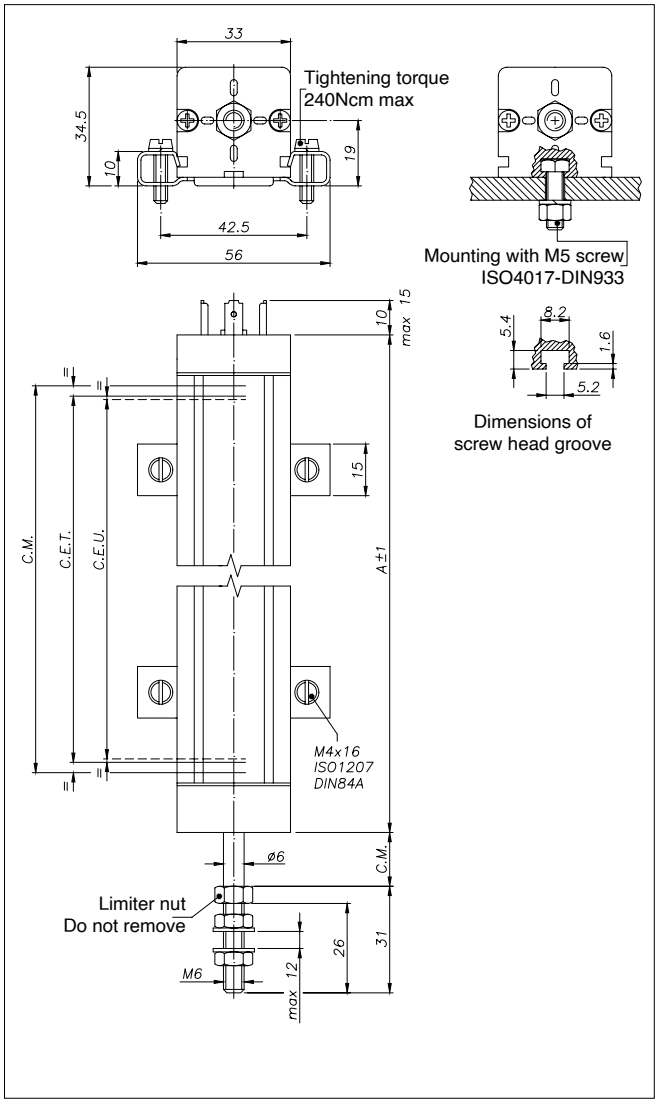

Important: all the data reported in the catalogue linearity, lifetime, temperature coefficient are valid for a sensor utilization as a ratiometric device with a max current across the cursor Ic ≤ 0.1 μA

ELECTRICAL / MECHANICAL DATA

MODEL		50	75	100	130	150	175	200	225	250	275	300	350	360	375	400	450	500
Useful electric stroke (C.E.U.) +3/-0	mm	50	75	100	130	150	175	200	225	250	275	300	350	360	375	400	450	500
Theoretical electrical stroke (C.E.T.) ±1	mm	C.E.U. + 3						C.E.U. + 4					355	365	380	406	457	508
Resistance (C.E.T.)	kΩ	5																
Mechanical stroke (C.M.)	mm	C.E.U. + 9						C.E.U. + 10		260	C.E.U. + 10		361	371	386	412	463	518
Case length (A)	mm	C.E.U. + 63						C.E.U. + 64		314,8	C.E.U. + 64		415	425,8	440	466	517	572

MODEL		600	650	700	750	800	900	950*	1000*	1050*	1100*	1200*	1250*	1350*
Useful electric stroke (C.E.U.) +3/-0	mm	600	650	700	750	800	900	950	1000	1050	1100	1200	1250	1350
Theoretical electrical stroke (C.E.T.) ±1	mm	609	660	711	762	813	914	965	1016	1067	1118	1220	1250	1350
Resistance (C.E.T.)	kΩ	5		10					20					
Mechanical stroke (C.M.)	mm	619	670	717	772	823	924	975	1026	1077	1128	1230	1280	1380
Case length (A)	mm	673	725	771.8	826	826	978	1029,8	1080,8	1131,8	1182,8	1284,8	1334,8	1434,8

* = Only for vertical installations

ELECTRICAL CONNECTIONS

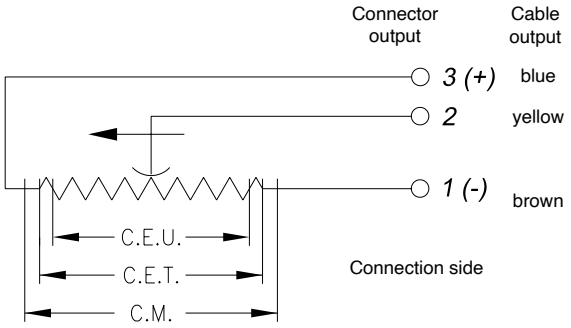

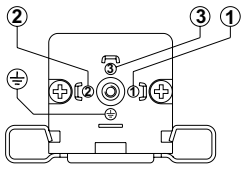

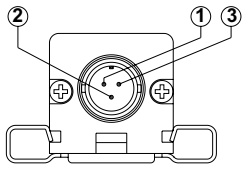

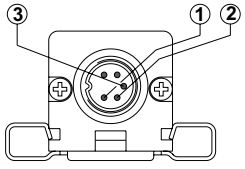

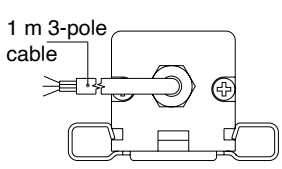

• **INSTALLATION INSTRUCTIONS**
• Make the specified electrical connections (DO NOT use the transducer as a variable resistance)
• When calibrating the transducer, be careful to set the stroke so that the output does not drop below 1% or rise above 99% of the voltage level.

ORDER CODE

Displacement transducer	**LT**

4-pole connector output DIN43650 ISO4400	**M**
3-pole connector output	**H**
5-pole connector output DIN43322	**B**
3-pole PVC cable output 3x0,25 1m	**F**

Model	

IP60 version	**S**
IP65 version	**P**

No certificate attached	**0**
Linearity curve to be attached	**L**

Cable length: 1 m	**0**
Cable length: 2 m	**2**
Cable length: 3 m	**3**
Other lengths on request	**---**

Color of plastic heads (green)	**0**

Example:**LT - M - 0300 - S 000X000X00**
LT displacement transducer, 4-pole connector output DIN43650 - ISO 4400, useful electrical stroke (C.E.U.) 300mm. IP60 protection, no certificate attached, green plastic components.

ACCESSORIES

STANDARD	**Code**
LT mounting kit, 2 brackets, screws	**PKIT009**
ON REQUEST	**Code**
LTM 4-pole 90° radial female connector DIN43650 IP65 PG9 clamp for ø6-ø8mm cable	**CON006**
LTH 3-pole axial female connector IP40 clamp for ø4-ø6mm cable	**CON002**
LTB 5-pole axial female connector DIN43322 IP40 clamp for ø4-ø6mm cable	**CON011**
LTB 5-pole axial female connector DIN43322IP65 PG7 clamp for ø4-ø6mm cable	**CON012**
LTB 5-pole 90° radial female connector DIN43322 IP40 clamp for ø4-ø6mm cable	**CON013**
Ball connection joint	**PKIT015**

GEFRAN spa reserves the right to make any kind of design or functional modification at any moment without prior notice

GEFRAN spa
via Sebina, 74
25050 PROVAGLIO D'ISEO (BS) - ITALIA
tel. 0309888.1 - fax. 0309839063
Internet: http://www.gefran.com