E11803

Damping magnet

MAGNET M4.1/HARD F.STAINLESS

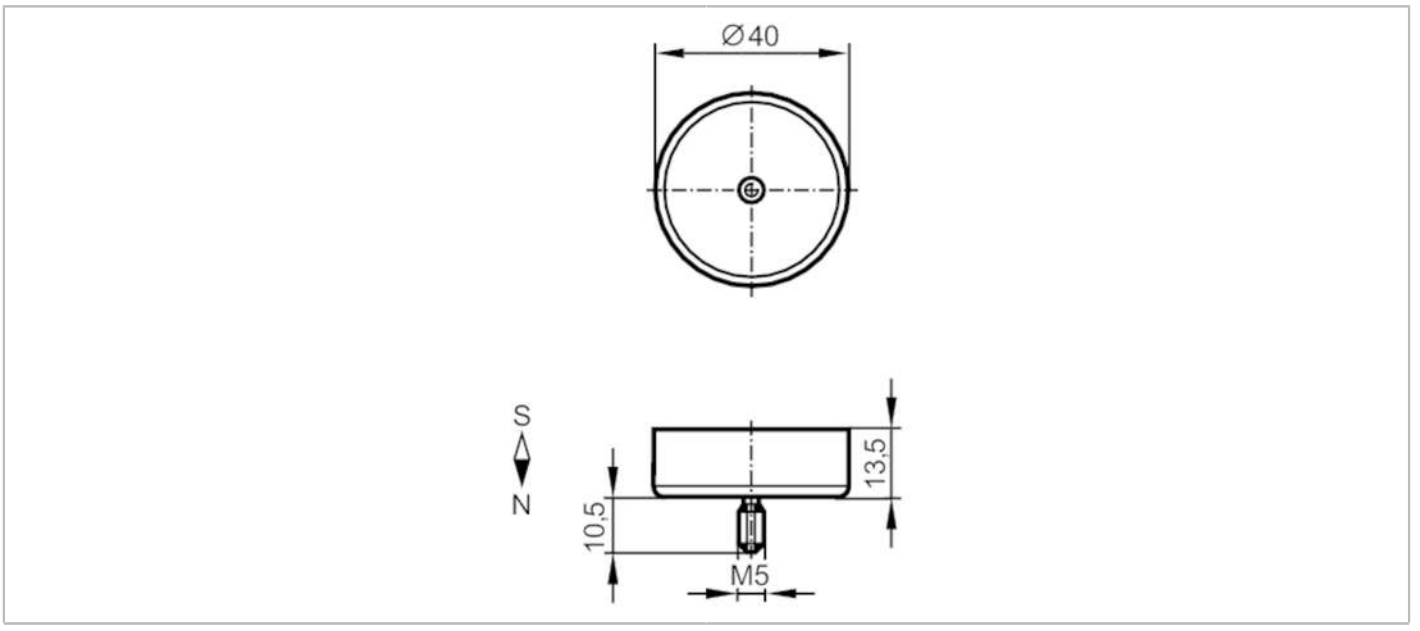

Operating conditions		
Ambient temperature	[°C]	-25...250
Mechanical data		
Weight	[g]	79.8
Dimensions	[mm]	Ø 40 / L = 13
Materials		hard ferrite HF 24/23; stainless steel (1.4571/316Ti)
Magnetic field strength	[mT]	80
Remarks		
Pack quantity		1 pcs.