E10980

Connecting cable with socket

ADOAH080MSS0010A06

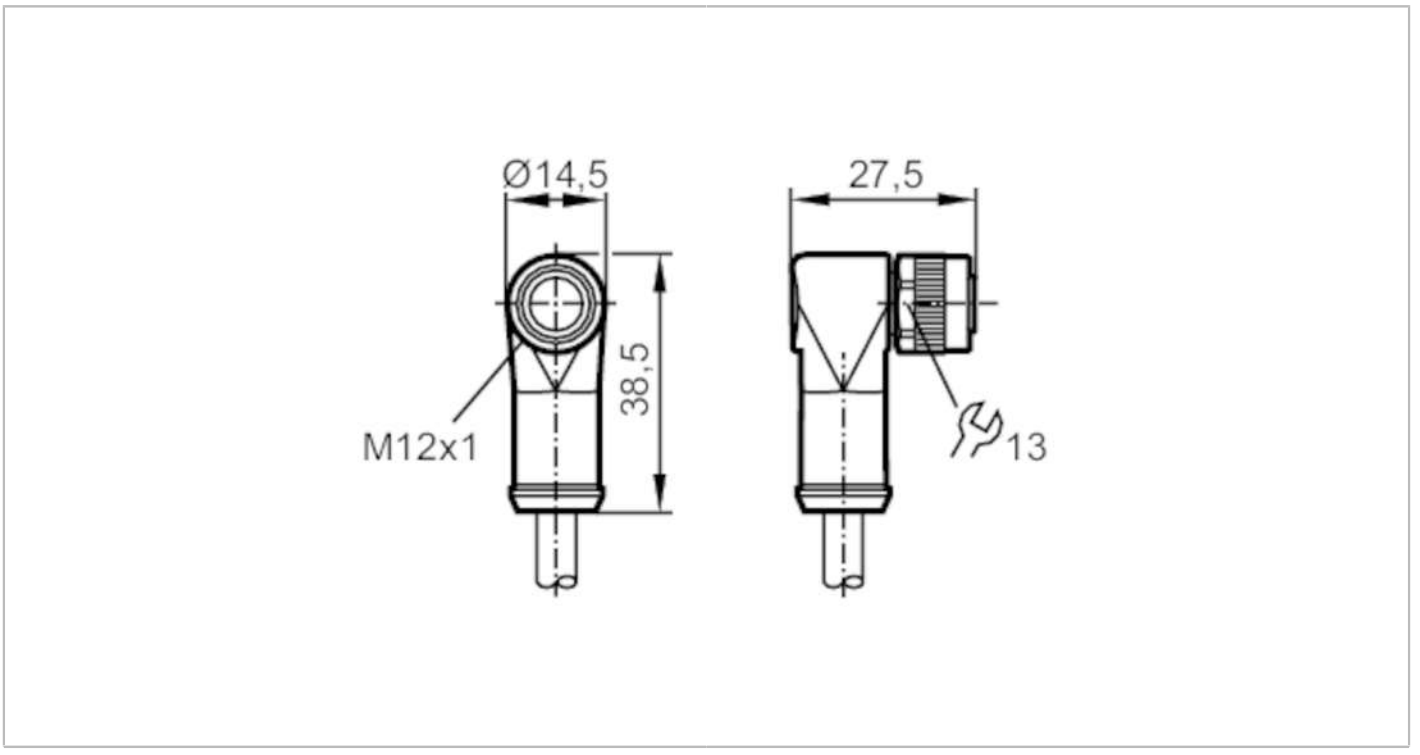

Electrical data		
Operating voltage	[V]	< 60 AC/DC
Operating conditions		
Ambient temperature	[°C]	-25...85
Protection		IP 68
Mechanical data		
Weight	[g]	479
Dimensions	[mm]	38.5 x 14.5 x 27.5
Materials		TPU
Moulded-body material		TPU
Material nut		diecast zinc, nickel-plated
Remarks		
Pack quantity		1 pcs.

E10980

Connecting cable with socket

ADOAH080MSS0010A06

Electrical connection

Cable: 10 m, PUR, black; 6 x 0.34 mm² (42 x Ø 0.1 mm)

Electrical connection - socket

Connector: 1 x M12, angled; coding: A; Moulded body: TPU; Locking: diecast zinc, nickel-plated



Connection

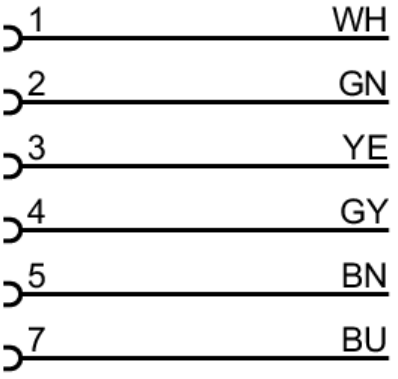

	Core colours :
BN =	brown
BU =	blue
GN =	green
GY =	grey
WH =	white
YE =	yellow