HENGSTLER

TECHNICAL DATASHEET

Incremental Encoder RI58-D / RI58TD / RI58CD

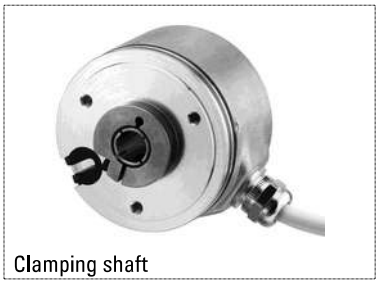
Clamping shaft

- Direct mounting without coupling
- Flexible hollow shaft design up to diameter 15 mm
- Through hollow shaft or as end shaft (blind shaft)
- Easy installation by means of clamping shaft or blind shaft
- Short overall length of 33 mm
- Fixing of flange by means of a stator coupling or set screw
- Various shaft versions
- Applications: actuators, motors
- Operating temperature up to +100 °C (RI58TD); up to -40 °C (RI58CD)

ICURO industry

NUMBER OF PULSES **RI58-D**

1 / 3 / 4 / 5 / 10 / 20 / 25 / 30 / 35 / 40 / 45 / 50 / 60 / 64 / 70 / 72 / 80 / **100** / 125 / 128 / 144 / 150 / 180 / 200 / **250** / 256 / 300 / 314 / 360 / 375 / 400 / 460 / 480 / **500** / 512 / 600 / 625 / 720 / 900 / **1000** / **1024** / **1250** / 1500 / 1800 / 2000 / 2048 / **2500** / 3000 / 3480 / **3600** / **4000** / 4096 / **5000**
Other number of pulses on request
Preferably available versions are printed in bold type.

NUMBER OF PULSES **RI58TD**

4 / 5 / 10 / 20 / 25 / 30 / 35 / 40 / 45 / 50 / 60 / 64 / 70 / 72 / 80 / **100** / 125 / 128 / 144 / 150 / 180 / 200 / **250** / 256 / 300 / 314 / 360 / 375 / 400 / 460 / 480 / **500** / 512 / 600 / 625 / 720 / 900 / **1000** / **1024** / **1250** / 1500 / 1800 / 2000 / 2048 / **2500**
Other number of pulses on request
Preferably available versions are printed in bold type.

NUMBER OF PULSES **RI58CD**

3000 / 3480 / **3600** / **4000** / 4096 / **5000**
Other number of pulses on request
Preferably available versions are printed in bold type.

TECHNICAL DATA
mechanical

Housing diameter	58 mm
Shaft diameter [1]	6 / 8 / 10 / 12 mm (Through hollow shaft) 6 / 8 / 10 / 12 / 14 / 15 mm (Hub shaft)
Flange (Mounting of housing)	Synchro flange
Mounting of shaft	Front clamping ring, Rear clamping ring, Center bolt
Protection class shaft input (EN 60529)	IP64
Protection class housing [2] (EN 60529)	Through hollow shaft: D, H: IP64 Hub shaft: E: IP65, F: IP67
Shaft tolerance	Ø 10 mm, tolerance g8 (-0,005 ... -0,027 mm), Ø 12 / 14 / 15 mm, tolerance g8 (-0,006 ... -0,033 mm)
Max. speed [3]	Hub shaft - E, F: max. 6000 rpm Through hollow shaft - D, H: max. 4000 rpm
Starting torque typ.	≤ 1 Ncm (Hub shaft - E, F) ≤ 2 Ncm (Through hollow shaft - D, H)

[1] Other shaft diameters on request
[2] Further protection class upon request
[3] Higher values available upon request

Specifications subject to change without notice

Incremental Encoder RI58-D / RI58TD / RI58CD

TECHNICAL DATA mechanical (continued)

Moment of inertia	approx. 35 gcm² (Hub shaft with clamping ring front - F) approx. 20 gcm² (Hub shaft, mounting with set screw - E) approx. 60 gcm² (Through hollow shaft with clamping ring front - D, H)
Vibration resistance (DIN EN 60068-2-6)	10 g = 100 m/s² (10 ... 2000 Hz)
Shock resistance (DIN EN 60068-2-27)	100 g = 1000 m/s² (6 ms)
Operating temperature	RI58-D: -10 °C ... +70 °C RI58TD: -40 °C ... +100 °C RI58CD: -40 °C ... +70 °
Storage temperature [1]	-25 °C ... +85 °C
Material housing	Aluminum
Weight	approx. 170 g with hub shaft (E,F), approx. 190 g with trough hollow shaft (D, H)
Connection[2]	Cable, axial or radial M23 connector (Conin), radial

[1] due to packing
[2] Standard cable length: 1,5 m cable, other cable length on request (only RI 58-TD)

TECHNICAL DATA electrical

General design	As per DIN EN 61010-1, protection class III, contamination level 2, overvoltage class II
Supply voltage [1]	RS422 + Sense (T): DC 5 V ±10 % RS422 + Alarm (R): ± 10% DC 5 V or DC 10 - 30 V Push-pull (K), Push-pull complementary (I): DC 10-30 V
Current w/o load typ.	40 mA (DC 5 V), 60 mA (DC 10 V), 30 mA (DC 24 V)
Max. pulse frequency	RS422: 300 kHz Push-pull: 200 kHz
Standard output versions	RS422 + Alarm (R): A, B, N, $\overline{A}$, $\overline{B}$, $\overline{N}$, $\overline{Alarm}$ RS422 + Sense (T): A, B, N, $\overline{A}$, $\overline{B}$, $\overline{N}$, Sense Push-pull (K): A, B, N, $\overline{Alarm}$ Push-pull complementary (I): A, B, N, $\overline{A}$, $\overline{B}$, $\overline{N}$, $\overline{Alarm}$
Pulse width error	± max. 25° electrical
Number of pulses	1 ... 5.000
Alarm output	NPN-O.C., max. 5 mA
Pulse shape	Square wave
Pulse duty factor	1:1

[1] With push-pull (K): pole protection

Incremental Encoder RI58-D / RI58TD / RI58CD

MOUNTING INSTRUCTIONS

In order to be able to compensate an axial and radial misalignment of the shaft, the encoder flange must not be fixed rigidly. Fix the flanges by means of a stator coupling (e.g. hubshaft with tether) as torque support (see "Accessories") or by means of a cylindrical pin:

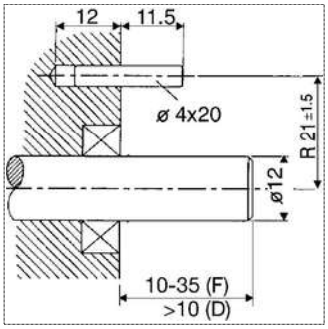

Dimensions in mm
also apply for all other shaft diameter
Mounting = D, F (Clamping ring)
Preparation of the machine flange [1]
(all mounting versions):
In the machine flange a straight pin must be installed (diameter 4x16 resp. 4x20, DIN 6325).
This pin is required as a torque support.
[1] Or as an option: stator coupling as torque support

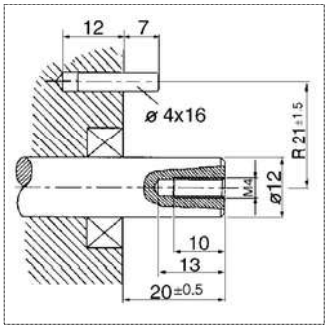

Dimensions in mm
also apply for all other shaft diameter
Mounting = E (mounting with center screw)
Preparation of the drive shaft
(only in mounting = E):
The drive shaft must be provided with a threaded bore M 4 x10:
This bore accepts the fastening screw of the shaft encoder.

ELECTRICAL CONNECTIONS
Cable PVC
(Connection codes A and B)

Cable PVC (A, B)	**Output circuit**			
Colour	**RS422 + Sense (T)**	**RS422 + Alarm (R)**	**push-pull (K)**	**push-pull com-plementary (I)**
white	Channel A	Channel A	Channel A	Channel A
white/brown	Channel $\overline{A}$	Channel $\overline{A}$		Channel $\overline{A}$
green	Channel B	Channel B	Channel B	Channel B
green/brown	Channel $\overline{B}$	Channel $\overline{B}$		Channel $\overline{B}$
yellow	Channel N	Channel N	Channel N	Channel N
yellow/brown	Channel $\overline{N}$	Channel $\overline{N}$		Channel $\overline{N}$
yellow/black	Sense GND	$\overline{Alarm}$	$\overline{Alarm}$	$\overline{Alarm}$
yellow/red	Sense V cc	Sense V cc		Sense V cc
red	DC 5 V	DC 5/10 - 30 V	DC 5/10 - 30 V	DC 5/10 - 30 V
black	GND	GND	GND	GND
Cable screen [1]	Cable screen [1]		Cable screen [1]	Cable screen [1]

[1] connected with encoder housing

Incremental Encoder RI58-D / RI58TD / RI58CD

ELECTRICAL CONNECTIONS
Cable TPE
(Connection codes E and F)

Cable TPE (E, F)	Output circuit			
Colour	**RS422 + Sense (T)**	**RS422 + Alarm (R)**	**push-pull (K)**	**push-pull complementary (I)**
brown	Channel A	Channel A	Channel A	Channel A
green	Channel $\overline{A}$	Channel $\overline{A}$		Channel $\overline{A}$
grey	Channel B	Channel B	Channel B	Channel B
pink	Channel $\overline{B}$	Channel $\overline{B}$		Channel $\overline{B}$
red	Channel N	Channel N	Channel N	Channel N
black	Channel $\overline{N}$	Channel $\overline{N}$		Channel $\overline{N}$
violet (white) [1]	Sense GND	$\overline{Alarm}$	$\overline{Alarm}$	$\overline{Alarm}$
blue	Sense V cc	Sense V cc		Sense V cc
brown/green	DC 5 V	DC 5/10 - 30 V	DC 5/10 - 30 V	DC 5/10 - 30 V
white/green	GND	GND	GND	GND
Cable screen [2]	Cable screen [2]	Cable screen [2]	Cable screen [2]	Cable screen [2]

[1] white with RS422 + Sense (T)
[2] connected with encoder housing

ELECTRICAL CONNECTIONS
M23 connector (Conin), 12 pole
(Connection codes D and H)

M12 connector, 8 pole
(Connection code 8)

Pin M23, 12 pole	Pin M12, 8 pole	RS422 + Sense (T)	RS422 + + Alarm (R)	push-pull (K)	push-pull complementary (I)
1	6	Channel $\overline{B}$	Channel $\overline{B}$	N.C.	Channel $\overline{B}$
2		Sense V cc	Sense V cc	N.C.	Sense V cc
3	7	Channel N	Channel N	Channel N	Channel N
4	8	Channel $\overline{N}$	Channel $\overline{N}$	N.C.	Channel $\overline{N}$
5	3	Channel A	Channel A	Channel A	Channel A
6	4	Channel $\overline{A}$	Channel $\overline{A}$	N.C.	Channel $\overline{A}$
7		N.C.	$\overline{Alarm}$	$\overline{Alarm}$	$\overline{Alarm}$
8	5	Channel B	Channel B	Channel B	Channel B
9		N.C. [1]	N.C. [1]	N.C. [1]	N.C. [1]
10	1	GND	GND	GND	GND
11		Sense GND	N.C.	N.C.	N.C.
12	2	DC 5 V	DC 5 V / 10 - 30 V	DC 10 - 30 V	DC 10 - 30 V

[1] screen for cable with CONIN connector

ELECTRICAL CONNECTIONS
KPT connector, 8 pole
(Connection code 2)

M16 connector (Binder), 6 pole
(Connection code J)

Pin KPT, 8 pole	RS422 + + Alarm (R)	push-pull (K)	push-pull complementary (I)
A	Channel B	Channel B	Channel B
B	Channel $\overline{B}$		Channel $\overline{B}$
C	Channel $\overline{A}$		Channel $\overline{A}$
D	Channel A	Channel A	Channel A
E	DC 5 V / 10 - 30 V	DC 10 - 30 V	DC 10 - 30 V
F	GND	GND	GND
G	Channel N	Channel N	Channel N
H	Channel $\overline{N}$	$\overline{Alarm}$	Channel $\overline{N}$

Pin M16, 6 pole	push-pull (K)
1	DC 10 - 30 V
2	Channel A
3	Channel N
4	Channel B
5	$\overline{Alarm}$
6	GND

© Hengstler GmbH Uhlandstr. 49 D-78554 Aldingen/ Germany
☎+49 74 24 -89 0 Fax +49 74 24 - 89 500
E-mail: info@hengstler.com Internet: www.hengstler.com

DIMENSIONED DRAWINGS

Mounting F: Hubshaft with clamping ring front

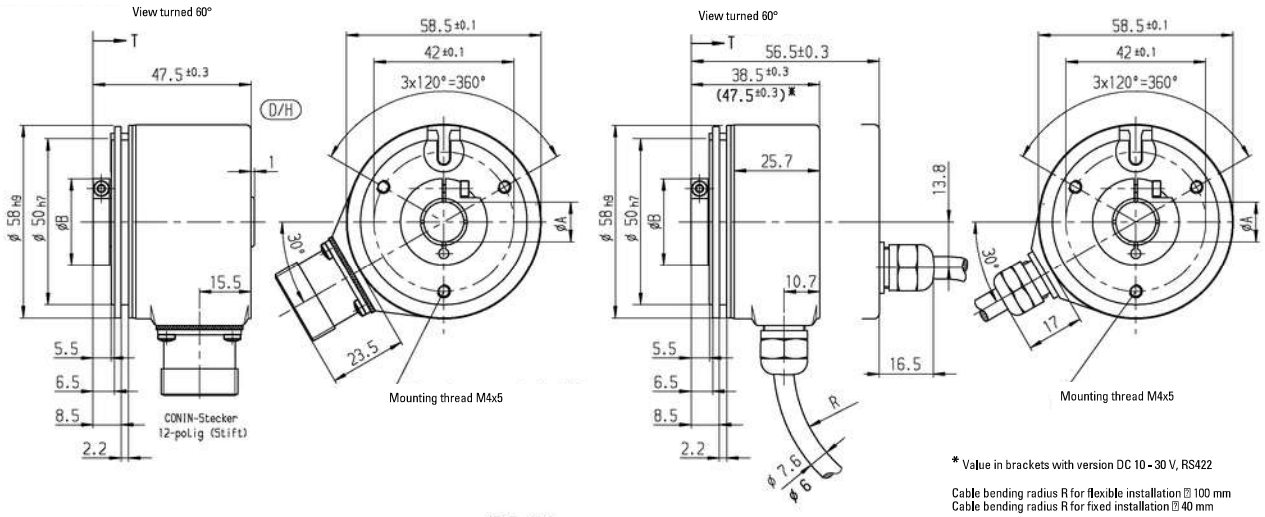

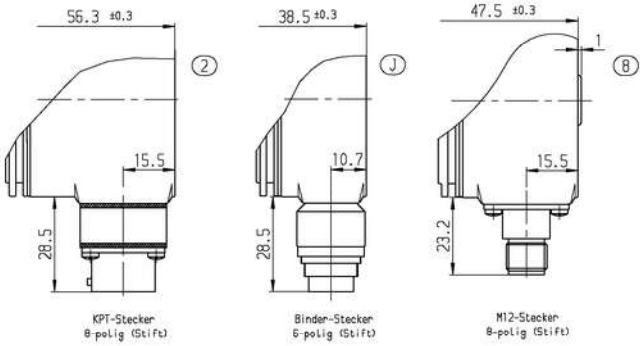

Dim.	Hollow shaft-Ø						Unit
A	6 H7	8 H7	10 H7	12 H7	14 H7	15 H7	mm
A*	6 g8	8 g8	10 g8	12 g8	14 g8	15 g8	mm
B	26	26	26	28	30	30	mm
T	33,5	33,5	33,5	33,5	22,5	22,5	mm
A* = Diameter of connection shaft							

Dimensions in mm

DIMENSIONED DRAWINGS (continued)

Mounting D: Through hollow shaft with clamping ring front

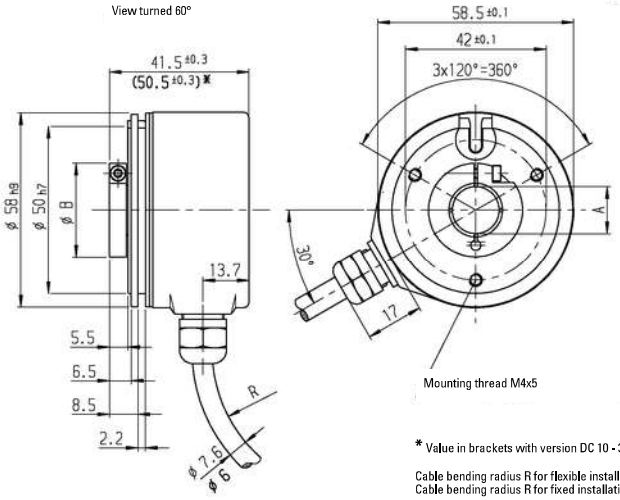

Mounting H: Through hollow shaft with clamping ring rear

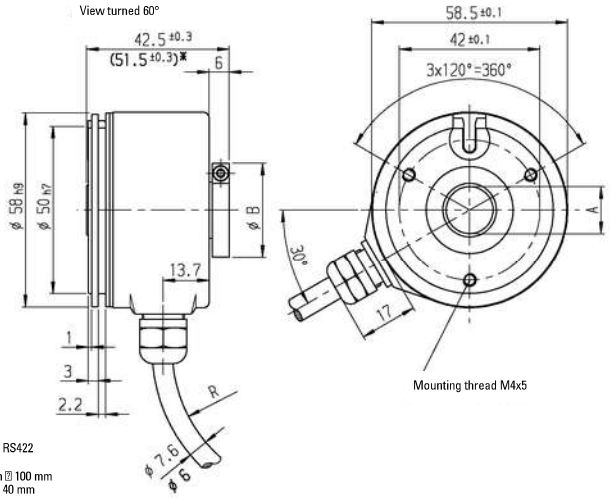

* Value in brackets with version DC 10 - 30 V, RS422

Cable bending radius R for flexible installation ⍰ 100 mm
Cable bending radius R for fixed installation ⍰ 40 mm

Dim.	Hollow shaft-Ø				Unit
A	6 ^{H7}	8 ^{H7}	10 ^{H7}	12 ^{H7}	mm
A*	6 $_{g8}$	8 $_{g8}$	10 $_{g8}$	12 $_{g8}$	mm
B	26	26	26	28	mm
Mounting "D"	X	X	X	X	
Mounting "H"			X	X	

A* = Diameter of connection shaft
X = Available connection shafts

Dimensions in mm

DIMENSIONED DRAWINGS (continued)

Mounting E: Hubshaft, mounting with center screw

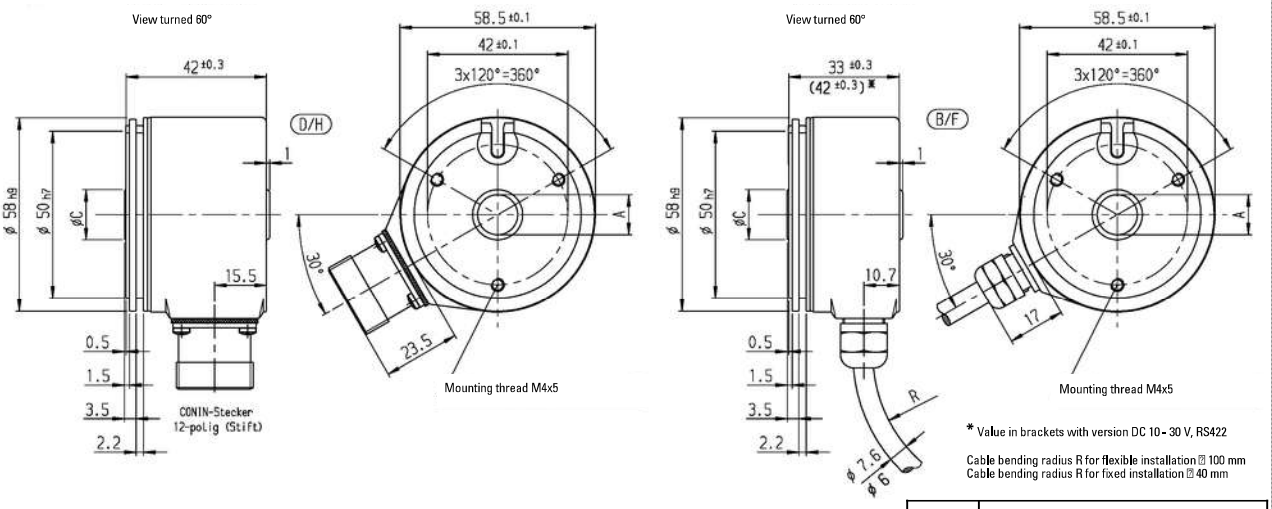

Dim.	Hollow shaft-Ø			Unit
A	10 ^{H7}	12 ^{H7}	14 ^{H7}	mm
A*	10 $_{g8}$	12 $_{g8}$	14 $_{g8}$	mm
C	15	15	17	mm
A* = Diameter of connection shaft				

Dimensions in mm

TECHNICAL DATASHEET

Incremental Encoder RI58-D / RI58TD / RI58CD

ORDERING INFORMATION

Type	Number of pulses	Supply voltage	Flange, Protection, Shaft [3]	Output	Connection [4, 5]
☐	☐	☐	☐	☐	☐
RI58-D **RI58TD*** **RI58CD***	RI58-D: **1 ...5000** RI 58TD: **4 ...2500** RI58CD: **>2500 ... 5000** Others available upon request	**A** DC 5 V [1] **E** DC 10 - 30 V [2]	**D.31** Through hollow shaft with clamping ring front, IP64, 6 mm **D.3C** Through hollow shaft with clamping ring front, IP64, 8 mm **D.32** Through hollow shaft with clamping ring front, IP64, 10 mm **D.37** Through hollow shaft with clamping ring front, IP64, 12 mm **H.32** Through hollow shaft with clamping ring rear, IP64, 10 mm **H.37** Through hollow shaft with clamping ring rear, IP64, 12 mm **E.42** Hubshaft, mounting with set screw, IP64, 10 mm **E.47** Hubshaft, mounting with set screw, IP64, 12 mm **F.41** Hubshaft, mounting with clamping ring front, IP64, 6 mm **F.4C** Hubshaft, mounting with clamping ring front, IP64, 8 mm **F.42** Hubshaft, mounting with clamping ring front, IP64, 10 mm **F.47** Hubshaft, mounting with clamping ring front, IP64, 12 mm **F.49** Hubshaft, mounting with clamping ring front, IP64, 14 mm **F.4D** Hubshaft, mounting with clamping ring front, IP64, 15 mm	**R** RS422 + Alarm **T** RS422 + Sense **K** Push-pull **I** Push-pull com-plementary	**A** PVC cable, axial **B** PVC cable, radial **E** PVC cable, axial **F** TPE cable, radial **D** M23 connector (Conin), 12 pole, radial, cw **H** M23 connector (Conin), 12 pole, radial, ccw **8** M12 connector, 8 pole, radial **J** M16 connector (Binder), 6pole, radial **2** KPT connector, 8 pole, radial Others available upon request

[1] only with output K, T, R available
[2] only with output K, I, R available
[3] Mounting (flange) code D, H only with connection code B and F (cable)
[4] Connection J not available with output R, T, I
[5] Connection 2, 8 not available with output T
*RI58TD and RI58CD not available with connection code A and B

Specifications subject to change without notice

Incremental Encoder RI58-D / RI58TD / RI58CD

ORDERING INFORMATION
Selection of cable length

Versions with cable outlet (connection A, B, E or F) are available with various lengths of cable. To order your desired cable length, please add the respective code to the end of your ordering code. For variants with connector on cable end please add cable length code in between. Further cable lengths on request.

Code	Cable length
without Code	1,5 m
-D0	3 m
-F0	5 m
-K0	10 m
-P0	15 m
-U0	20 m
-V0	25 m
-W0	30 m
-X0	40 m
-Y0	50 m

Examples:
Cable 3 m length: ... B - D0
Cable mit 3 m length and M23 connector, cw: ... F - D0 - I

Incremental Encoder RI58-D / RI58TD / RI58CD

Accessories

ACCESSORIES Hubshaft with tether as stator coupling, ordering code 1 531 162

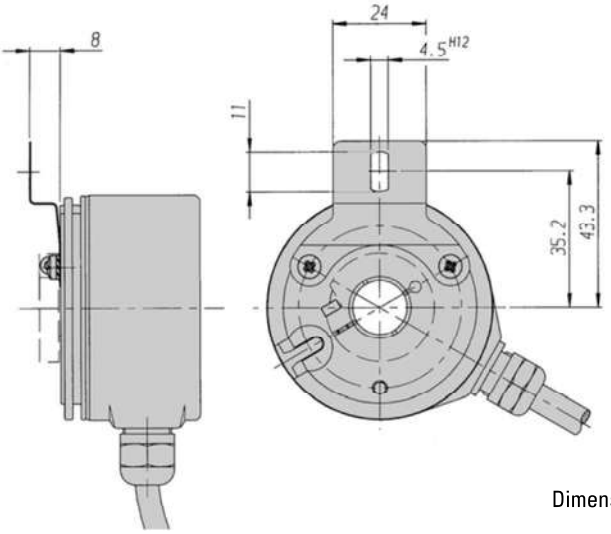

Dimensions in mm

CONNECTORS

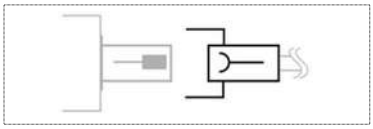

Connector (socket) matching with encoder connector	Ordering code
M16 (Binder), 6 pole, straight, IP67, mating connector for connection J/N	3 539 472
M23 (Conin), 12 pole, PG9, cw, mating connector for connection C/D/ -I	3 539 202

CONNECTORS

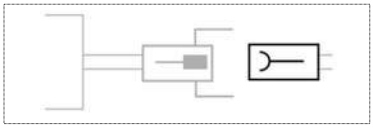

Coupling (socket) matching with encoder cable with connector	Ordering code
M23 (Conin), 12 pole, cw, mating connector for connection -C (cable plug 3 539 186)	3 539 187
M23 (VDW), 12 pole, cw, mating connector for connection -B (cable plug 3 539 252)	3 539 304

CONNECTORS

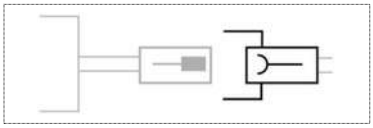

Connector (socket) matching with encoder cable with connector	Ordering code
M23 (Conin), 12 pole, ccw, mating connector for connection G/H/-D/-H	3 539 229
M23 (VDW), 12 pole, ccw, mating connector for connection -E (cable plug 3 539 274)	3 539 305

COUNTERS

Counters	Art.-Nr.
Multifunctional counter tico 732	www.hengstler.com
Multifunctional counter tico 772	www.hengstler.com

Specifications subject to change without notice

TECHNICAL DATASHEET

Incremental Encoder RI58-D / RI58TD / RI58CD

Accessories

CONNECTING CABLES

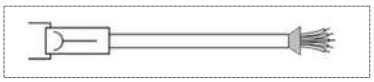

Connecting cables with plug (socket) on one end	Ordering code
M16 (Binder), 6 pole, PVC cable, mating connector for connection J/N, 3 m	1 522 405
M16 (Binder), 6 pole, PVC cable, mating connector for connection J/N, 5 m	1 522 406
M16 (Binder), 6 pole, PVC cable, mating connector for connection J/N, 10 m	1 522 340
M16 (Binder), 6 pole, PVC cable, mating connector for connection J/N, 15 m	1 522 833
M16 (Binder), 6 pole, PVC cable, mating connector for connection J/N, 50 m	1 522 836
M23 (Conin), 12 pole, TPE cable, cw, mating connector for connection C/D/-I, 3 m	1 522 348
M23 (Conin), 12 pole, TPE cable, cw, mating connector for connection C/D/-I, 5 m	1 522 349
M23 (Conin), 12 pole, TPE cable, cw, mating connector for connection C/D/-I, 10 m	1 522 350
M23 (Conin), 12 pole, TPE cable, cw, mating connector for connection C/D/-I, 15 m	1 522 454
M23 (Conin), 12 pole, TPE cable, cw, mating connector for connection C/D/-I, 20 m	1 522 456
M23 (Conin), 12 pole, TPE cable, cw, mating connector for connection C/D/-I, 25 m	1 522 457
M23 (Conin), 12 pole, TPE cable, cw, mating connector for connection C/D/-I, 30 m	1 522 464
M23 (Conin), 12 pole, TPE cable, cw, mating connector for connection C/D/-I, 40 m	1 522 643
M23 (Conin), 12 pole, TPE cable, cw, mating connector for connection C/D/-I, 50 m	1 522 793
M23 (Conin), 12 pole, TPE cable, ccw, mating connector for connection G/H/-D/-H, 3 m	1 522 394
M23 (Conin), 12 pole, TPE cable, ccw, mating connector for connection G/H/-D/-H, 5 m	1 522 395
M23 (Conin), 12 pole, TPE cable, ccw, mating connector for connection G/H/-D/-H, 10 m	1 522 396
M23 (Conin), 12 pole, TPE cable, ccw, mating connector for connection G/H/-D/-H, 15 m	1 522 447
M23 (Conin), 12 pole, TPE cable, ccw, mating connector for connection G/H/-D/-H, 20 m	1 522 461
M23 (Conin), 12 pole, TPE cable, ccw, mating connector for connection G/H/-D/-H, 25 m	1 522 462
M23 (Conin), 12 pole, TPE cable, ccw, mating connector for connection G/H/-D/-H, 30 m	1 522 463
M23 (Conin), 12 pole, TPE cable, ccw, mating connector for connection G/H/-D/-H, 40 m	1 522 779

CONNECTING CABLES

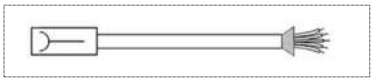

Connecting cables with coupling (socket) on one end	Ordering code
M23 (Conin), 12 pole, TPE cable, cw, mating connector for connection -C, 10 m	1 522 735
M23 (Conin), 12 pole, TPE cable, cw, mating connector for connection -C, 20 m	1 522 621

CONNECTING CABLES

Cable not made up with connectors	Ordering code
PVC cable, 10-core + screen	3 280 114 + length
PVC cable, 6-core + screen	3 280 113 + length
TPE cable, 12-core + screen	3 280 112 + length

Specifications subject to change without notice