BES 516-369-G-SA2-S49-00,05
BES0376

PNP
NO
flush mountable

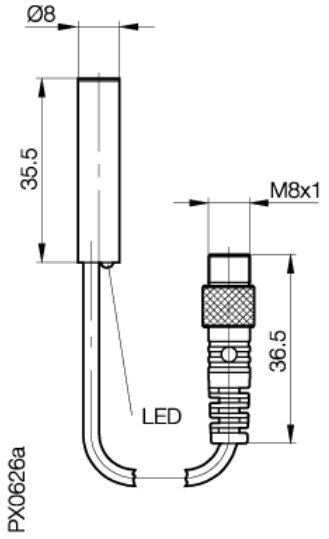

Electrical data:

Connection	Cable with connector M8
Electrical type	DC
No-load supply current damped	= 25 mA
Operating frequency (f)	800 Hz
Time delay before availability	10 ms
Hysteresis max (H)	15 %
Switching output	PNP
Switching element function	NO
Supply voltage max. (Ub)	30 V
Supply voltage min. (Ub)	10 V
Load current capacity (Ie)	130 mA
No-load supply current undamped	12 mA
Off-state current max (Ir)	80 µA
Voltage drop max. static	3,5 V
Rated operational voltage (Ue)	24 DC V
Utilization category	DC 13
Ripple max. of Ue	= 10 %

General data:

Output indication	yes
Protected against polarity reversal	yes
Degree of protection IP	IP67
Approval	CE
Short circuit protected	yes

Wiring:

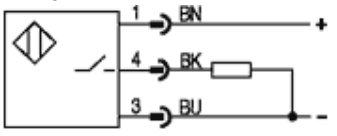

Pinout:



Mechanical data:

Mounting	flush mountable
Degree of polution	3
Sensing face material	PBT
Diameter	8 mm
Housing material	corrosion resistance Steel
Ambient temperature max	+70 °C
Repeat accuracy max. (R)	5 %
Rated operating distance (sn)	2 mm
Assured operating distance	0...1,6 mm
Ambient temperature min	-25 °C