New! TP SERIES - SMT WASHABLE TINY PUSHBUTTON SWITCHES

C

DESIGNED EXCLUSIVELY FOR SURFACE MOUNTING

SMT TP Series switches incorporate many desireable features that include:

- **Tape & reel packaging**
  This type of packaging is recommended for:
  - economy
  - suitability for automated placement
  - handling of large quantities of components per packaging unit
  - positive component positioning
  - protection of terminals against damage during handling
  - high static resistance

- **Reflow solderable**
  - High temperature plastic materials
  - Tin plated grounding brackets
  - Tin-lead alloy over nickel terminal plating
  - Terminals turned outward to prevent the shadow effect in infrared soldering and to permit visual inspection of the solder joints
  - .021" (0.55mm) air gap between p.c. board and switch case
  - End stackable with .400" (10.16mm) pitch
  - Available with positioning pins to assure correct switch orientation during the reflow process and provide additional mechanical integrity

- **Protected against electrostatic discharges (ESD) up to 10 KV.**

- **Washable**
  Switches are designed to withstand cleaning processes, including hot water under pressure.

Surface mount devices (SMD) are subject to more stringent constraints of temperature, solderability, sealing and space savings than through-hole components.

To meet these requirements, APEM has designed a family of tiny surface mount switches that include TP Series pushbutton switches, TG Series slide switches and TL Series toggle switches. See Slide & Toggle switch sections of catalog for TG & TL Series respectively.

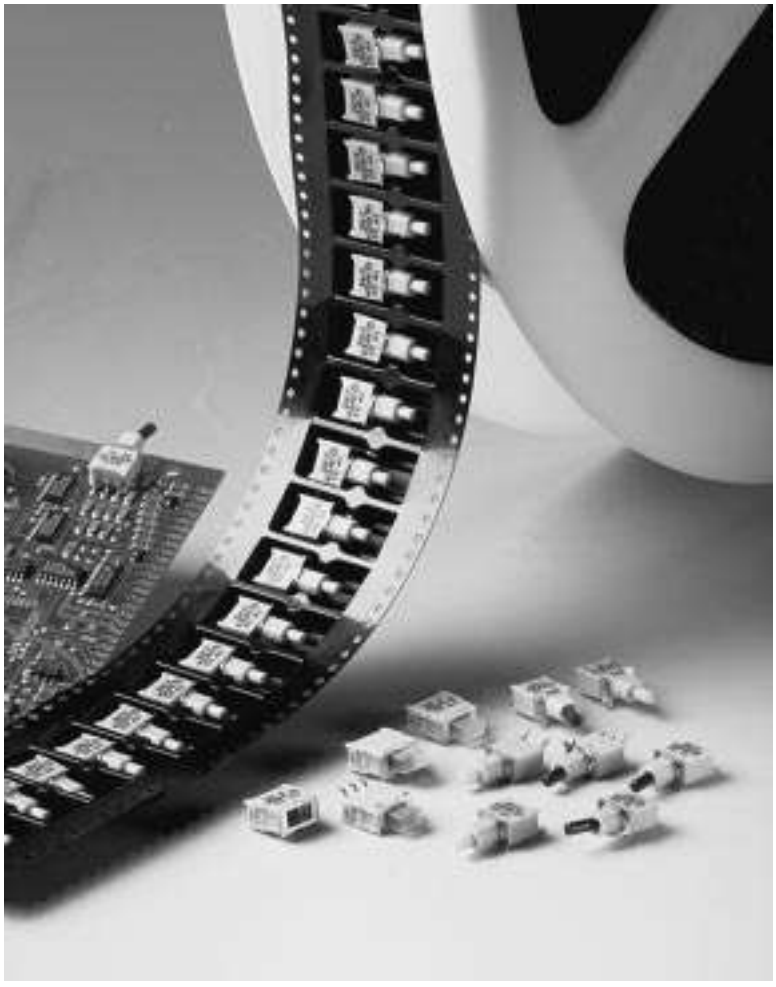

SPECIFICATIONS SUBJECT TO CHANGE WITHOUT NOTICE

New! TP SERIES - SMT WASHABLE TINY PUSHBUTTON SWITCHES

SPECIFICATIONS SUBJECT TO CHANGE WITHOUT NOTICE

ELECTRICAL SPECIFICATIONS

Contact ratings (resistive lds.):	0.4 VA at 20 V max. (AC or DC)
Minimum load:	10 mA at 50 mV or 10µA at 5 VD
Initial contact resistance:	50 milliohms maximum
Insulation resistance:	1000 MΩ min. at 500 VDC
Dielectric strength:	1000 V rms between terminals & frame. 500 V rms between terminals
Electrical life (at full load):	60,000 cycles
Static resistance:	10 KV (Schaffner equipment)

GENERAL SPECIFICATIONS

Travel:	ON-MOM .039" (1mm), OFF-MOM. .031" (0.8mm)
Operating temperature range:	-40°C to +85°C
Moisture resistance:	21 days per IEC 512-6 test 11c
Vibration resistance:	10-500 Hz/10g per IEC 512-4 test 6d
Shock resistance:	50 g per IEC 512-4 test 6c

MATERIALS

Case:	High temperature plastic UL94V-0
Actuator:	High temperature plastic UL94V-0
Grounding brackets:	Tin plated steel (includes positioning pins)
Contacts:	Gold plated brass
Terminals:	Brass with tin-lead alloy over nickel plate

SOLDERING AND CLEANING

Reflow soldering:	Infrared, vapor phase and infrared convection
Washable:	Per IEA-RS448-2: water and detergent - preferred. Solvents.

PACKAGING

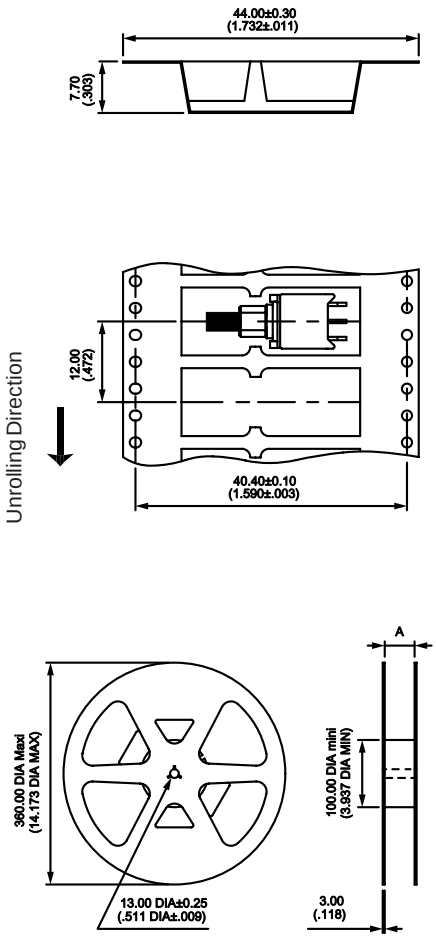

Standard packaging unit:
700 pieces
Tape meeting international standard IEC Publication 286-3 (EIA481A)
Start leader: 15.7" (400mm) min.
Dimension 'A': 1.748" (44.40mm)

New! TP SERIES - SMT WASHABLE TINY PUSHBUTTON SWITCHES

C

Single pole momentary pushbutton switches



MODEL NO.	CIRCUIT	
TP32WS83500	ON	MOM
TP33WS83500	OFF	MOM
Handle position:		

Function 2 shown

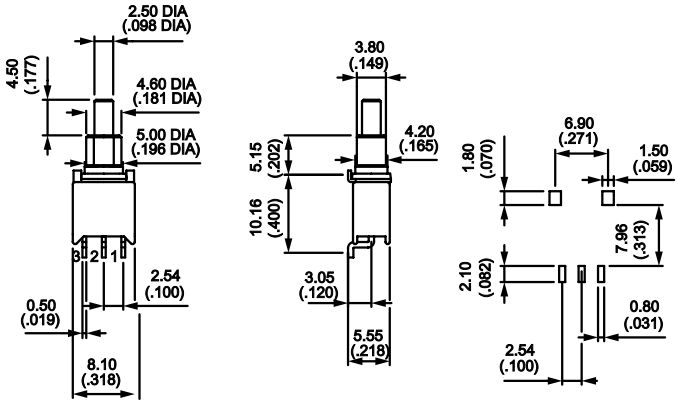

Single pole momentary pushbutton switches with positioning pins



MODEL NO.	CIRCUIT	
TP32WS83565	ON	MOM
TP33WS83565	OFF	MOM
Handle position:		

Function 2 shown

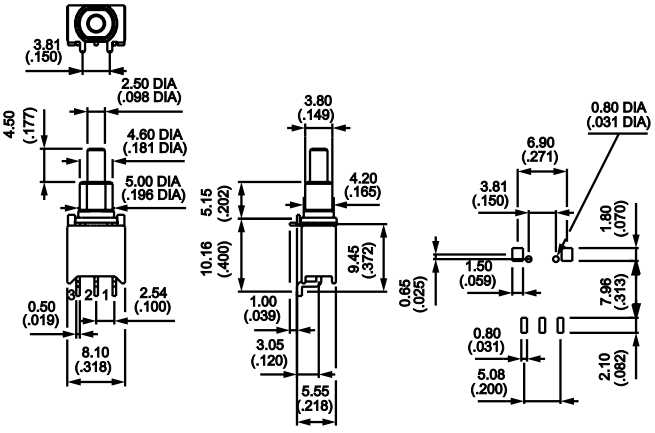

SWITCH ACTION

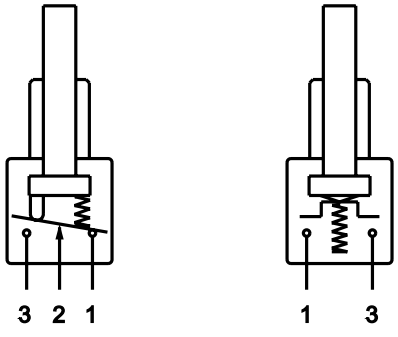

Function 2 Function 3

P.C. BOARD DIMENSIONS

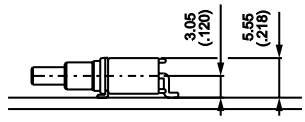

SPECIFICATIONS SUBJECT TO CHANGE WITHOUT NOTICE

REFLOW SOLDERING - STANDARD PROFILE

The printed circuit board, carried by a conveyor belt,travels through the reflow soldering oven and experiences the following programmed cycles:

a. pre-heat to a maximum of 200°C for 30 seconds
b. reflow at a maximum of 245°C for 10 seconds
c. final cleaning

TEMPERATURE/TIME PROFILE (typical)

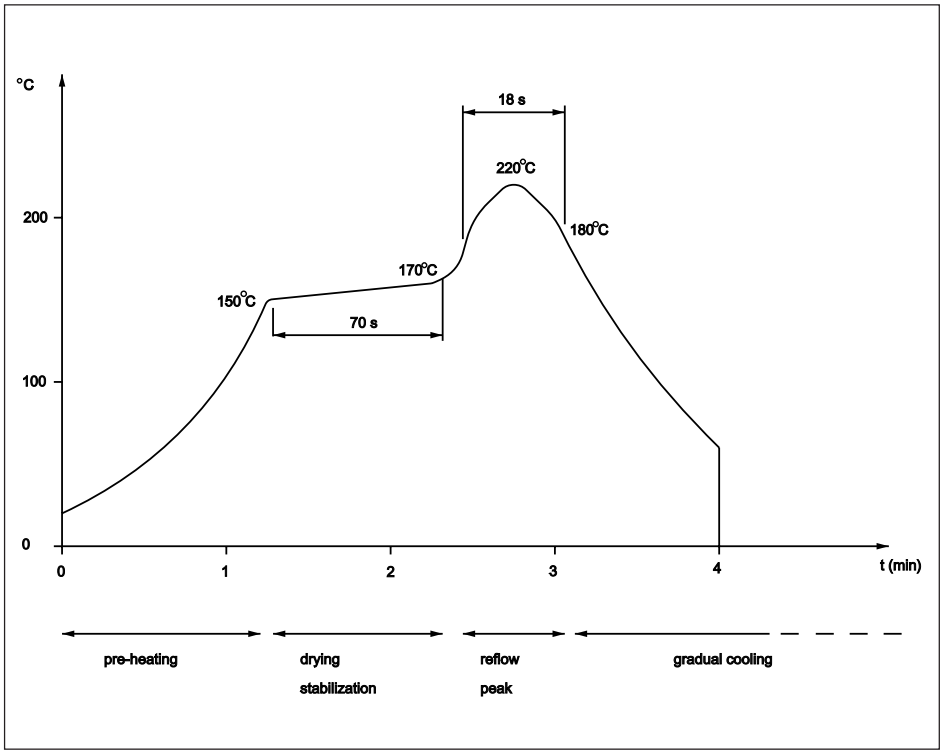

PROCESSING STEPS

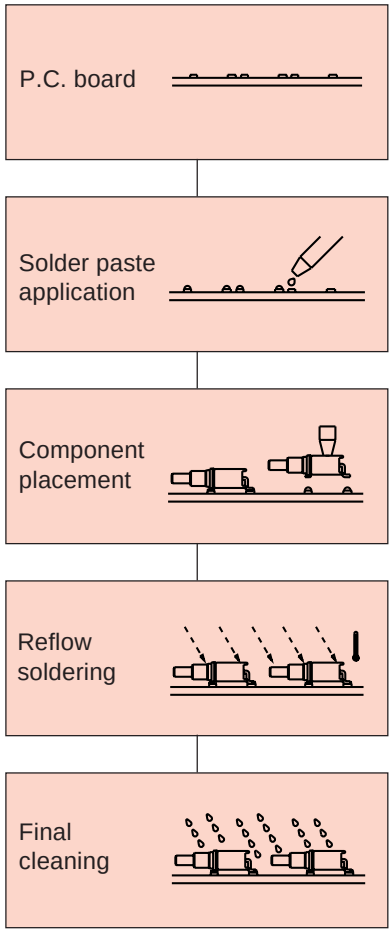

P.C. BOARD REWORK RECOMMENDATIONS

Hot air reflow technique is preferred. Avoid the use of a soldering iron.

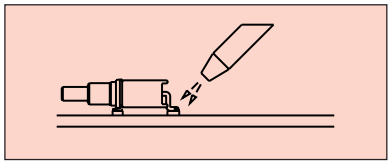

Caution: Excessive and/or repeated high temperature exposure may affect switch performance & reliability.

SPECIFICATIONS SUBJECT TO CHANGE WITHOUT NOTICE

C