M/58112
Vacuum pumps

- -0,85 or -0,9 bar
- Compact design
- 14% lower air consumption than comparable single stage units
- No wearing parts
- Compatible with a wide range of vacuum line contaminants
- Allows direct connection of suction cups and piped exhaust facility



Technical features

Medium:
Compressed air, filtered and non-lubricated

Operation:
Single stage ejector

Operating pressure:
Optimum 5 bar (72 psi), 8 bar (116 psi) maximum

Operating temperature:
-20 ... 150°C (-4 ... +302°F)max.
Air supply must be dry enough to avoid ice formation at temperatures below +2°C (35°F)

Materials:
Housing: anodised aluminium,
Nozzles: brass

Technical data

Symbol	Vacuum (bar)	Sound level (dB [A])	Weight (kg)	Model
	-0,85	66 ... 74	0,054	M/58112/09
	-0,90	71 ... 82	0,157	M/58112/11

Flow characteristics
(all values given apply to an atmospheric pressure of 1013 mbar)

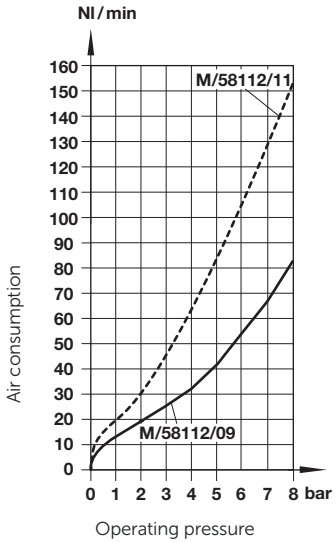

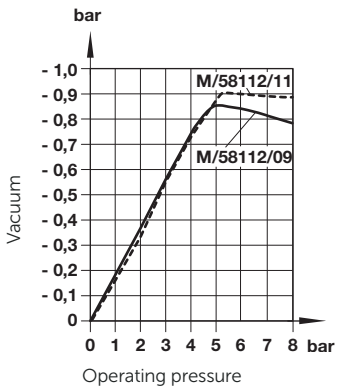

Our policy is one of continued research and development. We therefore reserve the right to amend, without notice, the specifications given in this document. (1998 - 3000e) © 2015 Norgren GmbH

Induced air (Nl/min), free air

0	-0,1	-0,2	-0,3	-0,4	-0,5	-0,6	-0,7	-0,8	Model
28	24	18	14	11	8	5,5	3	1	M/58112/09
55	47	36	28	23	17	12	6	2,5	M/58112/11

Note: Values given in the tables are theoretical and apply to an operating pressure of 5 bar

Time (sec) for evacuation of 1 litre volume to vacuum

-0,1	-0,2	-0,3	-0,4	-0,5	-0,6	-0,7	-0,8	0,85	0,9	Model
0,27	0,56	0,89	1,44	2,00	2,88	4,31	7,97	14,36	–	M/58112/09
0,15	0,31	0,49	0,72	1,00	1,41	2,08	3,71	5,6	8,11	M/58112/11

Recommended tube dimensions (internal diameter)

Compressed air	Vacuum	Exhaust	Model
≥ Ø 3	≥ Ø 5	≥ Ø 6	M/58112/09
≥ Ø 3	≥ Ø 7	≥ Ø 9	M/58112/11

Dimensions

M/58112/09

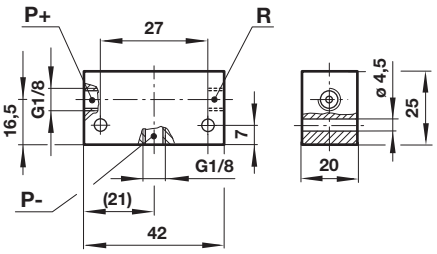

M/58112/11

Dimensions in mm
Projection/First angle

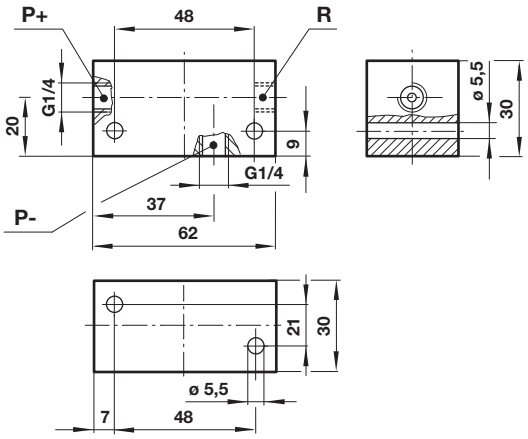

Warning

These products are intended for use in industrial compressed air systems only. Do not use these products where pressures and temperatures can exceed those listed under **»Technical features/ data«.**

Before using these products with fluids other than those specified, for non-industrial applications, life-support systems or other applications not within published specifications, consult Norgren Ltd.

Through misuse, age, or malfunction, components used in fluid power systems can fail in various modes.

The system designer is warned to consider the failure modes of all component parts used in fluid power systems and to provide adequate safeguards to prevent personal injury or damage to equipment in the event of such failure.

System designers must provide a warning to end users in the system instructional manual if protection against a failure mode cannot be adequately provided.

System designers and end users are cautioned to review specific warnings found in instruction sheets packed and shipped with these products.

Our policy is one of continued research and development. We therefore reserve the right to amend, without notice, the specifications given in this document. (1998 - 3000e) © 2015 Norgren GmbH