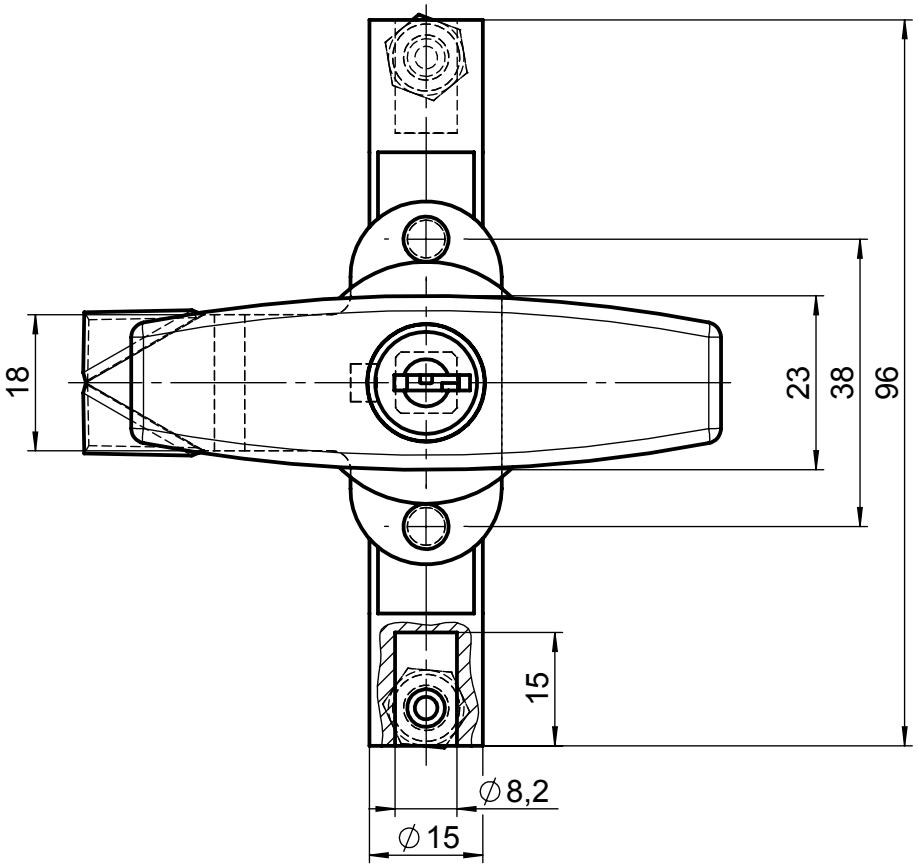


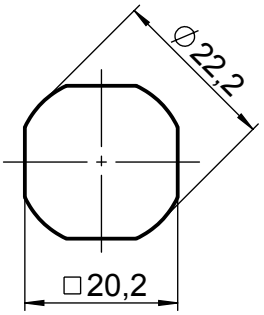


*cut out*

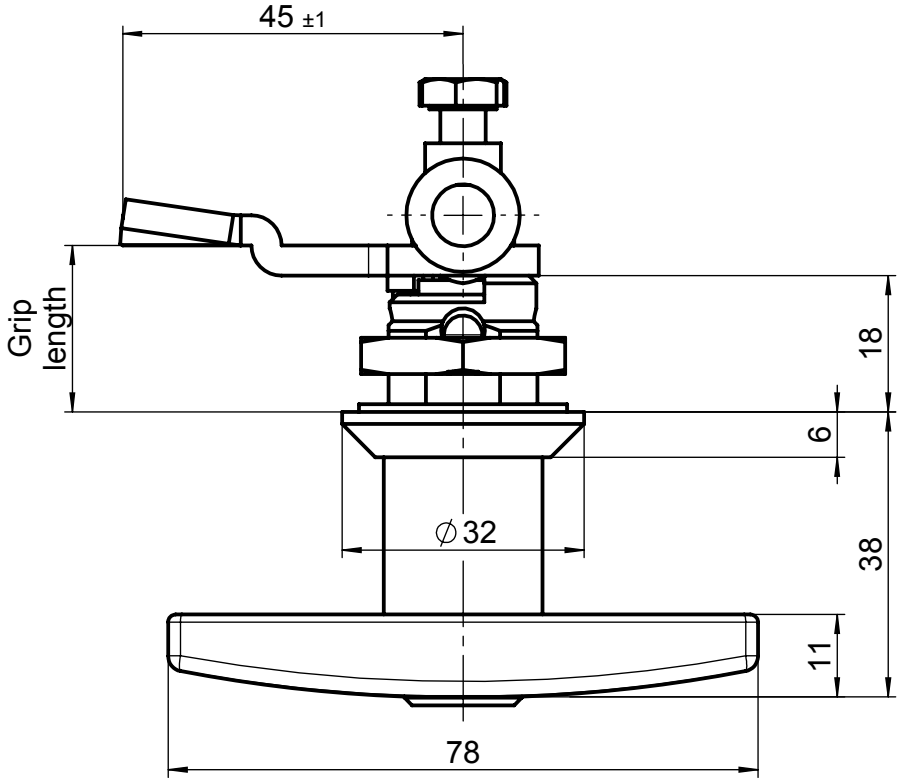


| Art. No. | Grip length |
|---|---|
| 348-7040 | 26mm |
| 348-7731 | 14mm |