LPZM5A8

CONTROL STATION, EMPTY WITH NO ACTUATORS, FOR 5 ACTUATORS. GREY COVER



General characteristics

Colour			Grey
IEC degree of protection			IP66 and IP67

Mechanical features

Weight		g	680

UL technical data

UL degree of protection			NEMA 4X

Ambient conditions

Temperature

Operating temperature			
	min	°C	-25
	max	°C	+70
Storage temperature			
	min	°C	-40
	max	°C	+85

Dimensions

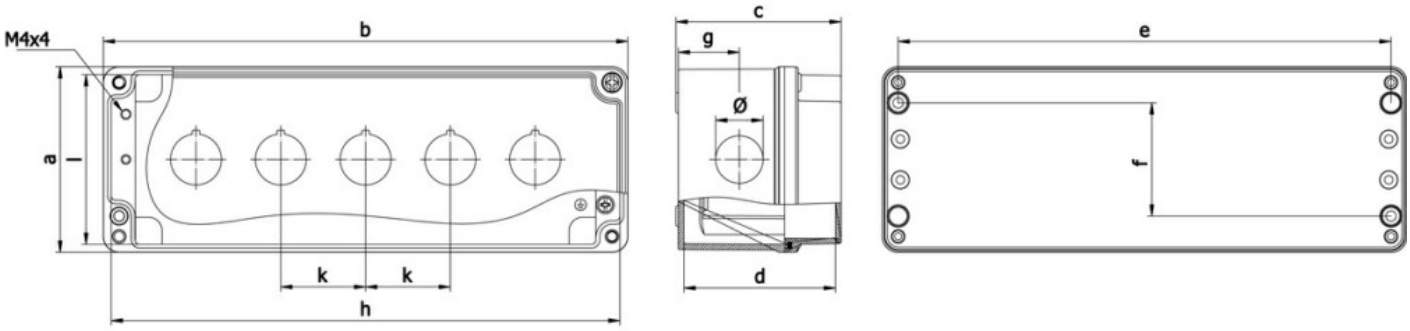

a	b	c	d	e	f	g	h	l	k	Ø
80	230	73	67	218	50	27	225	75	37.5	21

Certifications and compliance

Compliance

CSA C22.2 n° 14
IEC/EN 60947-1
IEC/EN 60947-5-1
UL508

Certificates

cULus
EAC

ETIM classification

ETIM 8.0	EC000200 - Enclosure for control circuit devices

The characteristics described in this document are subject to updates or modifications at any time. The descriptions, technical and functional information, illustrations and instructions in this brochure are purely illustrative, and are consequently not contractually binding