SUL 289 g | Article number: 2890033

Description



- Analogue time switch with daily or weekly program (switching disc can be turned)
- 2 channels
- With power reserve (NiMH rechargeable battery)
- Quartz controlled
- 49 tappets included in delivery
- Tappets
- Shortest switching time: 20 minutes or 2 hours
- Clock hands for time display
- Switching status display

Technical data

Operating voltage	230 V AC
Frequency	50 – 60 Hz
Number of channels	2
Installation type	Front panel installation/wall installation
Type of connection	Screw terminals
Drive	Quartz-controlled stepper motor
Program	Daily program, Weekly program
Power reserve	3 days full power reserve approx. 3 days after connection to operating voltage
Switching capacity at 250 V AC, cos φ = 1	10 A
Switching capacity at 250 V AC, cos φ = 0,6	2 A
Shortest switching times	20 min, 2 h
Programmable every	5 min, 30 min
Time accuracy at 25 °C	≤ ± 1 s/day (quartz)
Type of contact	Changeover contact
Switching output	Potential-free and phase-independent
Stand-by consumption	0,5 W
Housing and insulation material	High-temperature resistant, self-extinguishing thermoplastic
Type of protection	IP 20
Protection class	II according to EN 60 730-1
Ambient temperature	-10 °C … +55 °C

Connection example

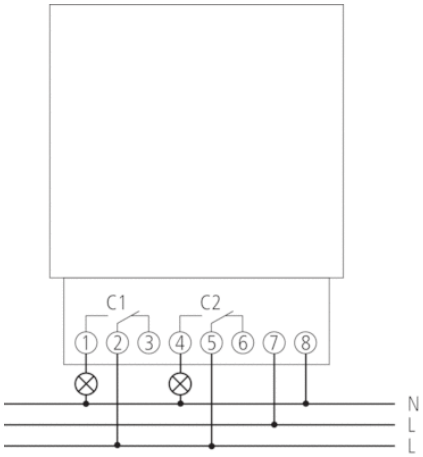

Scale drawings

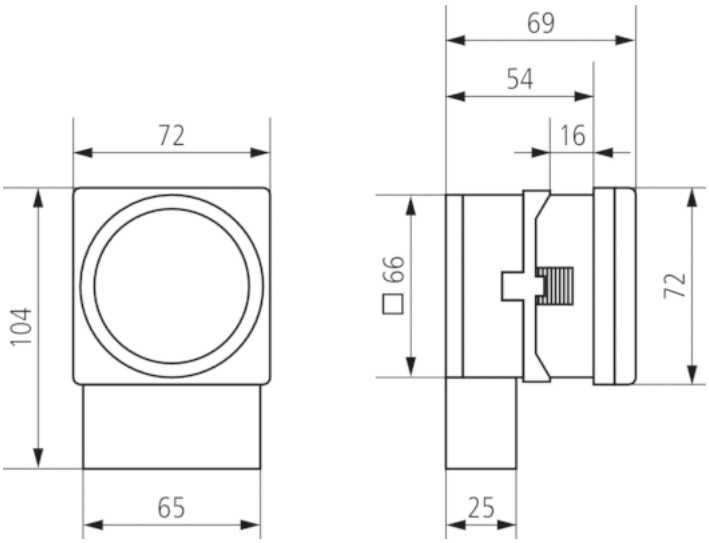

Accessories

Snap-on mounting 72 x 72

- Article number: 9070071
  Details ▸ www.theben.de

