Inductive Sensors
BES M08MH1-PSC15B-S04G
M 8 x 65
normally-open
Sn=1,5mm
shielded

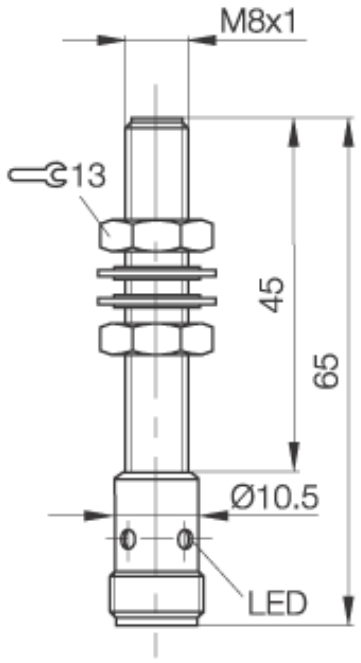

PX1576

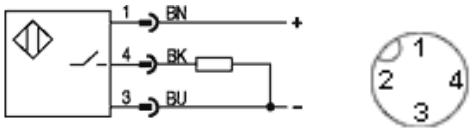

Common Data

Product name	Black Line
Mounting in steel	shielded
Rated operating distance Sn	1,5mm
Assured operating distance Sa	0...1,2mm
Repeatability R	<= 5%
Function indication	yes
Ambient temperature range	-25...+70°C

Mechanical Data

Measurements BxHxT or DxT	M 8 x 65mm
Housing material	nickel plated brass
Material of sensing face	PBT
Degree of protection	IP67IP
Connection	Connector S4

Schock: Halfsinus, 30 gn, 11ms
Vibration: 55 Hz, 1mm Amplitude, 3 x 30 Minutes

Electrical Data

Current type	DC
Wiring	3-Wire
switching function	normally-open
Output signal	PNP
Rated opertional voltage	24 DCV
Rated opertional current	100mA
Supply voltage	12...30 DCV
max. switching frequency	1000Hz
No-load supply current	<= 10mA
Off-state current	<= 20µA
Voltage drop	<= 3V
Short circuit protection	yes
Protected against polarity reversal	yes

CE

Utilization categories	DC 13
Insulation class	

Datasheet number:

Definitions see general catalog.
If not otherwise noted, ratings according to
IEC 60947-5-2 (DIN EN60947-5-2)

Balluff GmbH
P.O.Box 1160
73761 Neuhausen Germany
Phone (07158) 173-0 Fax (07158) 5010