SKF

SKF Y-bearing units for extreme temperatures

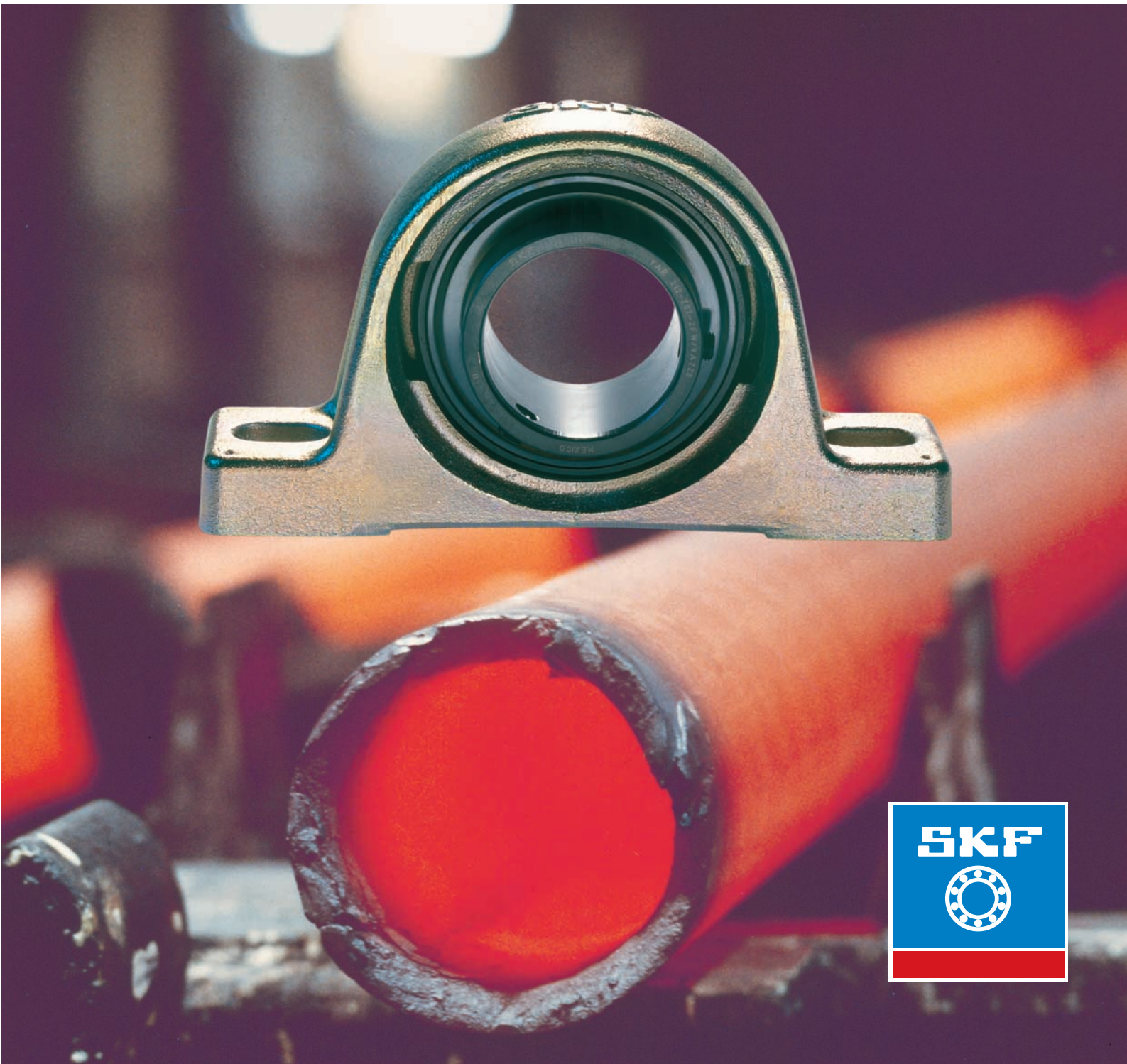

Contents

Made by SKF® stands for excellence. It symbolises our consistent endeavour to achieve total quality in everything we do. For those who use our products, “Made by SKF” implies three main benefits.

Reliability – thanks to modern, efficient products, based on our worldwide application know-how, optimised materials, forward-looking designs and the most advanced production techniques.

Cost effectiveness – resulting from the favourable ratio between our product quality plus service facilities, and the purchase price of the product.

Market lead – which you can achieve by taking advantage of our products and services. Increased operating time and reduced down-time, as well as improved output and product quality are the key to a successful partnership.



From –150 to +350 °C 3
Y-bearing units 4
Y-bearing units for extreme temperatures 4

Design of bearing arrangements 6
Influence of operating temperature 6
Selection of bearing size 6
Bearing arrangement 8
Mounting 8

Bearing data – general 9

Product tables 10
Y-bearing plummer block units
for metric shafts 10
for inch shafts 11
Y-bearing flanged units
with square housing for metric shafts 12
with square housing for inch shafts 13
with oval housing for metric shafts 14
with oval housing for inch shafts 15
Y-bearings
for metric shafts 16
for inch shafts 17

The SKF Group – a worldwide corporation 18

From –150 to +350 °C

The range of SKF bearings and bearing units for extreme temperatures has been extended. The range now includes, in addition to the well-proven deep groove ball bearings and axlebox units of the TVN design for autoclave wagons, also Y-bearing units which are suitable for very high as well as very low temperatures.

The new Y-bearing units are available in three different housing styles with a choice of two different bearing designs.

SKF has, therefore, the widest range of bearings and bearing units for extreme temperatures; it more than meets the demands for

- reduced machine operating costs,
- extended service life,
- high operational reliability and
- minimum maintenance.

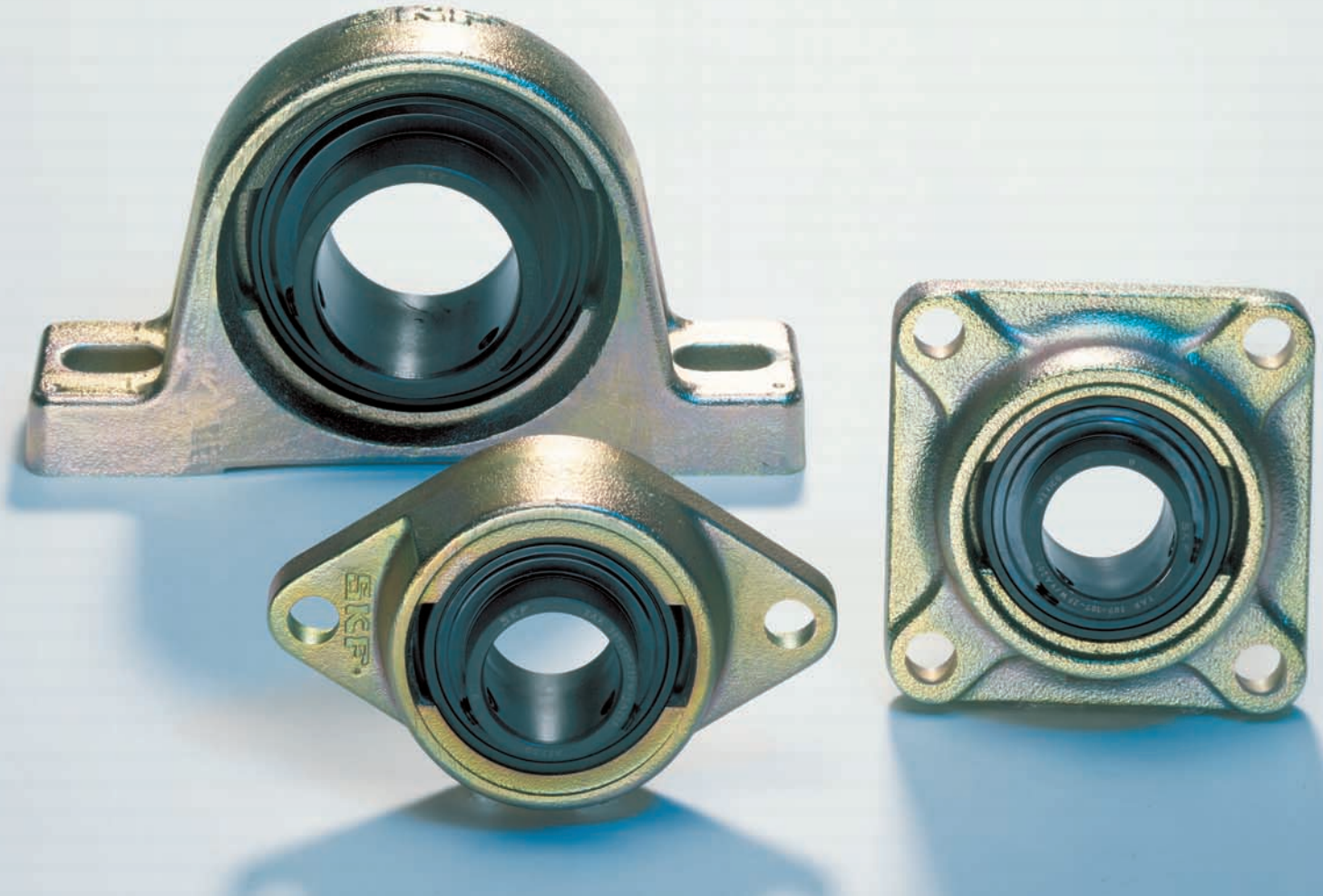

Y-bearing units

Y-bearing units have been on the market for many years now and, because of their special properties and advantages, they are well-respected. They consist of a deep groove ball bearing with a convex sphered outside diameter (sometimes referred to as an insert bearing) and a housing with a corresponding concave sphered seating. These sphered seating surfaces enable initial errors of alignment between shaft and housing to be compensated for.

The Y-bearings incorporated in the Y-bearing units differ from traditional deep groove ball bearings basically in four respects. They have

- a sphered outside diameter,
- plus tolerances in the bore for easy mounting on commercial drawn shafting,
- an extended inner ring with holes to take grub (set) screws for easy attachment to the shaft, and
- highly efficient seals which protect the bearing even under extreme conditions.

Y-bearing units for extreme temperatures

SKF Y-bearing units for extreme temperatures have housings of grey cast iron. The housings are available in the following designs

- Plummer block
- Flanged housing; square flange with four holes for attachment bolts
- Flanged housing; oval flange with two holes for attachment bolts

To meet the widely differing engineering demands in this wide temperature range, two different versions of bearings of series YAR 2-2FW are used: one for extreme demands and one for more normal demands.

The Y-bearing housings

The cast housings of the units for extreme temperatures are interchangeable with those of the standard SKF Y-bearing units except for a few sizes which have some dimensions which differ slightly. The principle differences apart from this are

- the surfaces are coated with zinc and yellow chromate; this galvanised layer provides added protection against corrosion and gives the housings a distinctive appearance;
- the housing bore is coated with a lubricating paste and the tolerances are such that misalignment compensation can be achieved at all times and at all temperatures;
- there is no grease nipple for obvious reasons – the bearings are lubricated for life.



The Y-bearings

SKF Y-bearings for extreme temperatures belong to series YAR 2, have inner rings extended at both sides and are fastened to the shaft by grub screws. The range covers bearings with bore diameters of 30 to 60 mm and $^{3}/_{4}$ to 2 $^{7}/_{16}$ in and meets most market needs. The bearings are available in two different designs: VA228 and VA201.

Supply situation
The Y-bearing units for extreme temperatures are delivered already assembled and are ready to mount. If required, the Y-bearings can also be supplied separately.

VA228 – for maximum performance
This design is an SKF top-of-the-range product. It incorporates a "coronet" cage of special graphite which also serves as a unique lubrication system (➔ **fig** 1). The minute quantities of graphite powder generated by the cage during operation are more than adequate for bearing lubrication and allow many years of trouble-free operation without maintenance. The bearings are also protected against the ingress of solid contaminants by a combination of shield and flinger at each side.

All surfaces of the bearing are manganese phosphated and the flingers are black oxidised. This provides protection against corrosion and the phosphate layer enhances bearing performance.

The bearings have a radial internal clearance which corresponds to twice the standard C5 clearance. The maximum permissible operating temperature range is from –150 to +350 °C. Another advantage of this bearing is its environmental friendliness. Even at the maximum operating temperature, no poisonous fumes or gases are produced.

VA201 – for more normal demands
These bearings have a pressed steel cage and are filled with a black, high-temperature lubricating paste (➔ **fig** 2). This paste is a mixture of polyalkylene glycol and graphite and has well-proven lubricating properties. Again the bearings are protected against the ingress of solid contaminants by a combination of shield and flinger.

All surfaces of the bearing are manganese phosphated and the flingers are black oxidised. This provides protection against corrosion and the phosphate layer provides for good adhesion of the paste and enhances bearing performance.

The bearings have a radial internal clearance which corresponds to twice the standard C5 clearance. The maximum permissible operating temperature range is from –40 to +250 °C. Dry lubrication pertains at temperatures above +200 °C.



Bearing of VA228 design

Fig 1

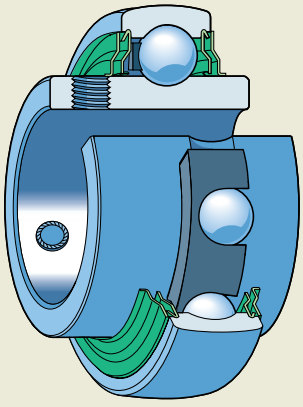

Bearing of VA201 design

Fig 2

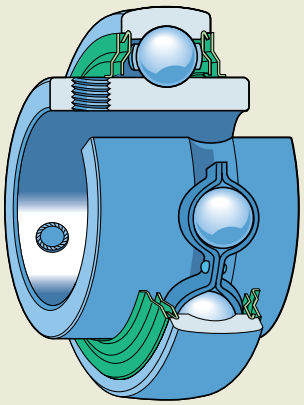

Design of bearing arrangements

Influence of operating temperature

At high temperatures, the load carrying capacity of the bearings is reduced. This is taken into consideration by multiplying the basic static load rating C_0 by a temperature factor f_T. Values of this factor at different temperatures will be found in **Table 1**.

Factor f_T for reduction of basic static load rating

Table 1

Operating temperature	Factor f_T
°C	–
150	1
200	0,95
250	0,9
300	0,8
350	0,64

Selection of bearing size

The size of bearing or unit required for a given application is selected with reference to the loads which are to be expected.

For Y-bearings and Y-bearing units of the VA228 and VA201 designs, the requisite size is determined based on the basic static load rating C_0, as the bearings rotate at very slow speeds.

The requisite basic static load rating can be determined using

$$C_0 = 2 (P_0/f_T)$$

where
C_0 = requisite basic static load rating of the Y-bearing or Y-bearing unit, N
P_0 = equivalent static bearing load, N
f_T = temperature factor (➔ **Table 1**)

The equivalent static bearing load is obtained from

$$P_0 = 0,6\ F_r + 0,5\ F_a$$

where
P_0 = equivalent static bearing load, N
F_r = actual radial bearing load, N
F_a = actual axial bearing load, N

When calculating P_0 the maximum load which can occur should be used and its radial and axial components inserted in the equation above. If $P_0 < F_r$, then $P_0 = F_r$ should be used.

Table 2 shows the requisite basic static load rating for different loads and temperatures.

Using the requisite basic static load rating calculated from the above, or taken from **Table 2** a suitable Y-bearing or Y-bearing unit can be selected from the product tables (from **page 10** onwards).

The bearing or unit selected should have a C_0 value which is equal to or greater than the requisite value.

Axial load carrying capacity

The axial load carrying capacity of these Y-bearing units and Y-bearings is limited to approximately 15 % of the basic static load rating C_0 beacause of the large radial internal clearance.

Table 2

Wheel load	Requisite basic static load rating C_0 for operating temperatures				
	150 °C	200 °C	250 °C	300 °C	350 °C
N	N				
500	1 000	1 050	1 110	1 250	1 560
1 000	2 000	2 100	2 220	2 500	3 120
2 000	4 000	4 200	4 440	5 000	6 250
3 000	6 000	6 300	6 670	7 500	9 400
4 000	8 000	8 400	8 900	10 000	12 500
5 000	10 000	10 500	11 100	12 500	15 600
6 000	12 000	12 600	13 300	15 000	18 800
7 000	14 000	14 700	15 500	17 500	21 900
8 000	16 000	16 800	17 800	20 000	25 000
9 000	18 000	18 900	19 900	22 500	28 100
10 000	20 000	21 000	22 200	25 000	31 300
11 000	22 000	23 100	24 500	27 500	34 400
12 000	24 000	25 200	26 700	30 000	37 500
13 000	26 000	27 300	29 000	32 500	–
14 000	28 000	29 400	31 100	35 000	–
15 000	30 000	31 500	33 300	37 500	–
16 000	32 000	33 600	35 000	–	–
17 000	34 000	35 700	37 800	–	–
18 000	36 000	37 800	–	–	–

Requisite basic static load rating C_0 for different loads and temperatures

Bearing arrangement

Y-bearing units do not permit any lateral displacement and are therefore not generally suitable for non-locating bearing arrangements. The distance between bearing positions should therefore be small or the units should be mounted in flexible sheet metal walls, to prevent them from being inadmissibly clamped.

If the distance between bearing positions is too long or temperatures are too high so that one bearing position must allow for shaft elongation to be compensated, it is recommended that the non-locating position is designed as follows.

The shaft at the non-locating side should be provided with two grooves at 120° to each other, to take special grub screws (which replace the standard grub screws) in the inner ring (➔ **fig 1**). This enables elongation of the shaft to be compensated for and prevents relative movement between the shaft and inner ring. To avoid problems in operation, the grub screws should have ground ends and the sliding surfaces in the shaft grooves should be coated with a suitable lubricating paste.

Shaft tolerances

Under normal operating conditions the shaft seatings for Y-bearings with grub screw locking should be machined to h7 (for light loads h8). For heavy loads it is necessary for the seatings to have an h6 tolerance.

Mounting

It is important to remember that the Y-bearings should not be locked in position on the shaft until the housing has been firmly bolted to its support. The bearing will then occupy its correct position and detrimental stresses will be avoided.

The grub screws in the inner ring extension should be tightened to locate the bearing on the shaft. The two screw holes are at 120° to each other. The screws should be tightened by hand using a hexagonal (Allen) key. If it is possible to measure the tightening torque, then the values given in **Table 3** should not be exceeded. The grub screw hexagonal socket dimensions are also given in **Table 3**.

Non-locating bearing arrangement

Fig 1

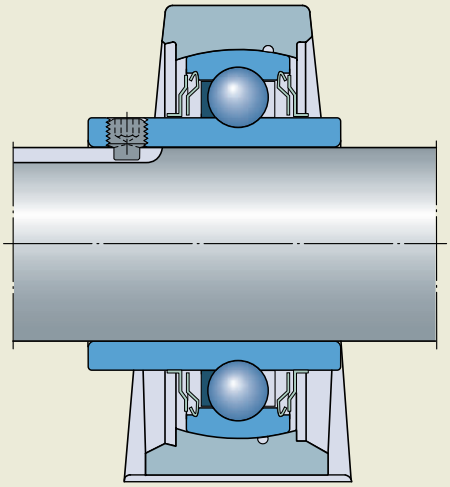

Grub screw hexagonal socket dimensions and tightening torques

Table 3

Bearing size		Dimension across flats	Tightening torque
over	incl.		max
mm/in		mm/in	Nm
Metric bearings			
	35	3	4
35	**45**	4	6,5
45	**60**	5	16,5
Inch-size bearings			
	1 3/16	1/8	4
1 3/16	**1 3/4**	5/32	6,5
1 3/4	**2 7/16**	3/16	16,5

Bearing data – general

Dimensions
The dimensions of SKF Y-bearings of series YAR 2 conform to ISO 9628:1992.

Tolerances
SKF Y-bearings are produced with the bore and outside diameter tolerances shown in **Table 1**. Because of the manganese phosphate surface treatment applied to the VA228 and VA201 designs there may be slight deviations from these values. However, this has no influence on their arrangement or performance.

The bearings for inch shafts are made to the same tolerances as the corresponding bearings for metric shafts with the exception of bearing YAR 207-104 which has the same bore tolerances as the next smaller bearing (bearing YAR 206).

The tolerance for the height of the shaft axis above the support surface, dimension H_1 of the plummer block unit is 0/–0,25 mm.

Internal clearance
The Y-bearings have twice the C5 clearance specified in ISO 5753:1991 for deep groove ball bearings. The inch-size bearings have the same clearance as the corresponding metric bearing. The actual clearance limits are given in **Table 2**.

Errors of alignment
Y-bearing units are able to compensate during mounting for errors of alignment up to ±5°.

Speeds
Bearings of the VA228 and VA201 designs are designed to be operated at shaft speeds up to approximately 100 r/min.

Cages
SKF Y-bearings for extreme temperatures of the VA201 design are fitted with a pressed steel cage (➔ **fig 1**).

Those of the VA228 design have a special one-piece “coronet” cage of graphite. This separates the balls and is guided axially by one of the shields (➔ **fig 1**). The graphite is an excellent lubricant for both rolling and sliding contacts. As the bearing rotates, minute quantities of graphite powder are released which are adequate to lubricate the bearing for many years and provide trouble-free operation.

Tolerances for Y-bearings of series YAR 2

Table 1

Nominal diameter		Bore diameter Deviation		Outside diameter Deviation	
over	incl.	high	low	high	low
mm		µm		µm	
18	**30**	+18	0	–	–
30	**50**	+21	0	0	–10
50	**80**	+24	0	0	–10
80	**120**	–	–	0	–15

Radial internal clearance

Table 2

Bore diameter d		Radial internal clearance	
over	incl.	min	max
mm		µm	
	24	56	96
24	**30**	60	105
30	**40**	80	130
40	**50**	90	145
50	**60**	110	180

Cages

Fig 1



Y-bearing plummer block units
for extreme temperatures
for metric shafts
d **20 – 60** mm

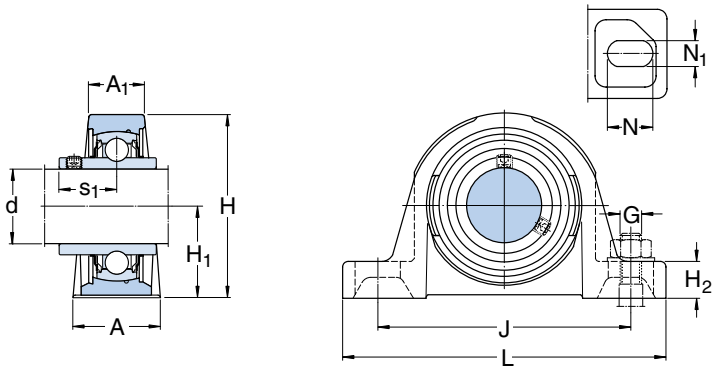

Dimensions													Basic static load rating	Mass	Designations	
															Y-bearing unit	Incorporated Y-bearing
d	A	A_1	H	H_1	H_2	J min	J max	L	N	N_1	G	s_1	C_0			
mm													N	kg	–	
20	32	21	64	33,3	14	88	106	127	20,5	11,5	10	18,3	6 550	0,57	**SY 20 TF/VA201**	YAR 204-2FW/VA201
															SY 20 TF/VA228	YAR 204-2FW/VA228
25	36	22	70	36,5	16	94	110	130	19,5	11,5	10	19,8	7 800	0,72	**SY 25 TF/VA201**	YAR 205-2FW/VA201
															SY 25 TF/VA228	YAR 205-2FW/VA228
30	40	25	82	42,9	16,5	108	127	152	23,5	14	12	22,2	11 200	1,10	**SY 30 TF/VA201**	YAR 206-2FW/VA201
															SY 30 TF/VA228	YAR 206-2FW/VA228
35	45	27	93	47,6	19	119	133	160	21	14	12	25,4	15 300	1,45	**SY 35 TF/VA201**	YAR 207-2FW/VA201
															SY 35 TF/VA228	YAR 207-2FW/VA228
40	48	30	99	49,2	19	125	146	175	24,5	14	12	30,2	19 000	1,80	**SY 40 TF/VA201**	YAR 208-2FW/VA201
															SY 40 TF/VA228	YAR 208-2FW/VA228
45	48	32	107	54	21	135	152	187	22,5	14,5	12	30,2	21 600	2,20	**SY 45 TF/VA201**	YAR 209-2FW/VA201
															SY 45 TF/VA228	YAR 209-2FW/VA228
50	54	34	114	57,2	22	149	165	203	26	18	16	32,6	23 200	2,70	**SY 50 TF/VA201**	YAR 210-2FW/VA201
															SY 50 TF/VA228	YAR 210-2FW/VA228
55	56	40	127	63,5	24	162	181	219	27,5	19	16	33,4	29 000	3,60	**SY 55 TF/VA201**	YAR 211-2FW/VA201
															SY 55 TF/VA228	YAR 211-2FW/VA228
60	63,5	42	138	68,5	25,4	179	202	241	29,5	19	16	39,7	36 000	4,45	**SY 60 TF/VA201**	YAR 212-2FW/VA201
															SY 60 TF/VA228	YAR 212-2FW/VA228

Y-bearing plummer block units
for extreme temperatures
for inch shafts
d $^{3}/_{4}$ – **2** $^{7}/_{16}$ in

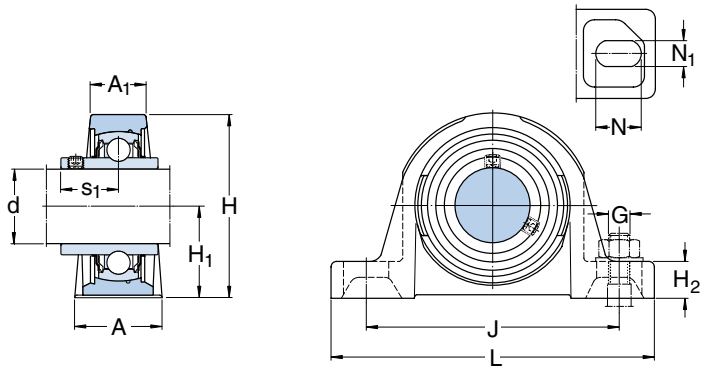

Dimensions													**Basic static load rating**	**Mass**	**Designations** Y-bearing unit	Incorporated Y-bearing
d	A	A_1	H	H_1	H_2	J min	J max	L	N	N_1	G	s_1	C_0			
in	mm												N	kg	–	
$^{3}/_{4}$	32	21	64	33,3	14	88	106	127	20,5	11,5	10	18,3	6 550	0,57	**SY 3/4 TF/VA201**	YAR 204-012-2FW/VA201
															SY 3/4 TF/VA228	YAR 204-012-2FW/VA228
1	36	22	70	36,5	16	94	110	130	19,5	11,5	10	19,8	7 800	0,72	**SY 1. TF/VA201**	YAR 205-100-2FW/VA201
															SY 1. TF/VA228	YAR 205-100-2FW/VA228
1 $^{3}/_{16}$	40	25	82	42,9	16,5	108	127	152	23,5	14	12	22,2	11 200	1,10	**SY 1.3/16 TF/VA201**	YAR 206-103-2FW/VA201
															SY 1.3/16 TF/VA228	YAR 206-103-2FW/VA228
1 $^{1}/_{4}$	45	27	93	47,6	19	119	133	160	21	14	12	25,4	15 300	1,50	**SY 1.1/4 TF/VA201**	YAR 207-104-2FW/VA201
															SY 1.1/4 TF/VA228	YAR 207-104-2FW/VA228
1 $^{1}/_{2}$	48	30	99	49,2	19	125	146	175	24,5	14	12	30,2	19 000	1,85	**SY 1.1/2 TF/VA201**	YAR 208-108-2FW/VA201
															SY 1.1/2 TF/VA228	YAR 208-108-2FW/VA228
1 $^{3}/_{4}$	48	32	107	54	21	135	152	187	22,5	14,5	12	30,2	21 600	2,25	**SY 1.3/4 TF/VA201**	YAR 209-112-2FW/VA201
															SY 1.3/4 TF/VA228	YAR 209-112-2FW/VA228
1 $^{15}/_{16}$	54	34	114	57,2	22	149	165	203	26	18	16	32,6	23 200	2,70	**SY 1.15/16 TF/VA201**	YAR 210-115-2FW/VA201
															SY 1.15/16 TF/VA228	YAR 210-115-2FW/VA228
2	56	40	127	63,5	24	162	181	219	27,5	19	16	33,4	29 000	3,75	**SY 2. TF/VA201**	YAR 211-200-2FW/VA201
															SY 2. TF/VA228	YAR 211-200-2FW/VA228
2 $^{7}/_{16}$	63,5	42	138	68,5	25,4	179	202	241	29,5	19	16	39,7	36 000	4,45	**SY 2.7/16 TF/VA201**	YAR 212-207-2FW/VA201
															SY 2.7/16 TF/VA228	YAR 212-207-2FW/VA228

Y-bearing flanged units with square housing
for extreme temperatures
for metric shafts
d **20 – 60** mm

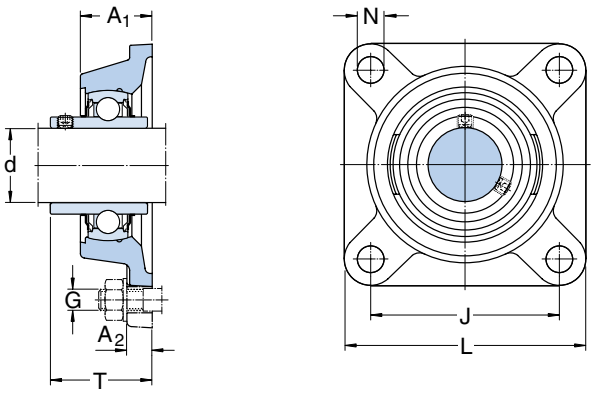

Dimensions								Basic static load rating	Mass	Designations Y-bearing unit	Incorporated Y-bearing
d	A_1	A_2	J	L	N	G	T	C_0			
mm								N	kg	–	
20	28,5	15	63,5	86	11,5	10	37,3	6 550	0,60	**FY 20 TF/VA201** **FY 20 TF/VA228**	YAR 204-2FW/VA201 YAR 204-2FW/VA228
25	30	15	70	95	12,5	10	38,9	7 800	0,77	**FY 25 TF/VA201** **FY 25 TF/VA228**	YAR 205-2FW/VA201 YAR 205-2FW/VA228
30	32,5	15	82,5	108	12,5	10	42,1	11 000	1,10	**FY 30 TF/VA201** **FY 30 TF/VA228**	YAR 206-2FW/VA201 YAR 206-2FW/VA228
35	35	15	92	118	14	12	46	15 300	1,40	**FY 35 TF/VA201** **FY 35 TF/VA228**	YAR 207-2FW/VA201 YAR 207-2FW/VA228
40	39	16,5	101,5	130	14	12	53,2	19 000	1,90	**FY 40 TF/VA201** **FY 40 TF/VA228**	YAR 208-2FW/VA201 YAR 208-2FW/VA228
45	40,5	17,5	105	137	16	14	53,2	21 600	2,10	**FY 45 TF/VA201** **FY 45 TF/VA228**	YAR 209-2FW/VA201 YAR 209-2FW/VA228
50	45	20	111	143	19	16	58,7	23 200	2,50	**FY 50 TF/VA201** **FY 50 TF/VA228**	YAR 210-2FW/VA201 YAR 210-2FW/VA228
55	47,5	21,5	130	162	19	16	62,7	29 000	3,60	**FY 55 TF/VA201** **FY 55 TF/VA228**	YAR 211-2FW/VA201 YAR 211-2FW/VA228
60	55	21,5	143	175	19	16	72,2	36 000	4,60	**FY 60 TF/VA201** **FY 60 TF/VA228**	YAR 212-2FW/VA201 YAR 212-2FW/VA228

Y-bearing flanged units with square housing
for extreme temperatures
for inch shafts
d **3/4 – 1 15/16** in

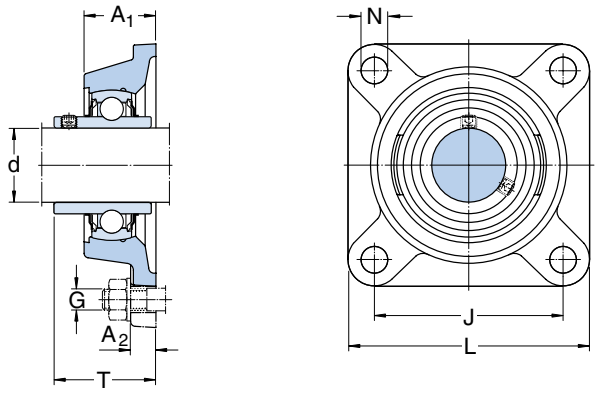

Dimensions								Basic static load rating	Mass	Designations	
										Y-bearing unit	Incorporated Y-bearing
d	A_1	A_2	J	L	N	G	T	C_0			
in	mm							N	kg	–	
3/4	28,5	15	63,5	86	11,5	10	37,3	6 550	0,60	**FY 3/4 TF/VA201**	YAR 204-012-2FW/VA201
										FY 3/4 TF/VA228	YAR 204-012-2FW/VA228
1	30	15	70	95	12,5	10	38,9	7 800	0,77	**FY 1. TF/VA201**	YAR 205-100.2FW/VA201
										FY 1. TF/VA228	YAR 205-100-2FW/VA228
1 3/16	32,5	15	82,5	108	12,5	10	42,1	11 000	1,10	**FY 1.3/16 TF/VA201**	YAR 206-103-2FW/VA201
										FY 1.3/16 TF/VA228	YAR 206-103-2FW/VA228
1 1/4	35	15	92	118	14	12	46	15 300	1,40	**FY 1.1/4 TF/VA201**	YAR 207-104-2FW/VA201
										FY 1.1/4 TF/VA228	YAR 207-104-2FW/VA228
1 1/2	39	16,5	101,5	130	14	12	53,2	19 000	1,90	**FY 1.1/2 TF/VA201**	YAR 208-108-2FW/VA201
										FY 1.1/2 TF/VA228	YAR 208-108-2FW/VA228
1 3/4	40,5	17,5	105	137	16	14	53,2	21 600	2,10	**FY 1.3/4 TF/VA201**	YAR 209-112-2FW/VA201
										FY 1.3/4 TF/VA228	YAR 209-112-2FW/VA228
1 15/16	45	20	111	143	19	16	58,7	23 200	2,50	**FY 1.15/16 TF/VA201**	YAR 210-115-2FW/VA201
										FY 1.15/16 TF/VA228	YAR 210-115-2FW/VA228
2	47,5	21,5	130	162	19	16	62,7	29 000	3,60	**FY 2. TF/VA201**	YAR 211-200-2FW/VA201
										FY 2. TF/VA228	YAR 211-200-2FW/VA228
2 7/16	55	21,5	143	175	19	16	72,2	36 000	4,60	**FY 2.7/16 TF/VA201**	YAR 212-207-2FW/VA201
										FY 2.7/16 TF/VA228	YAR 212-207-2FW/VA228

Y-bearing flanged units with oval housing
for extreme temperatures
for metric shafts
d **20 – 50** mm

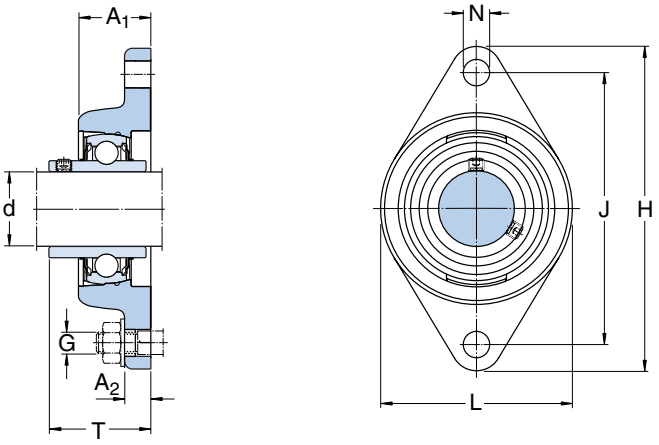

Dimensions									Basic static load rating	Mass	Designations	
											Y-bearing unit	Incorporated Y-bearing
d	A_1	A_2	H	J	L	N	G	T	C_0			
mm									N	kg	–	
20	24,5	11	112	90	60,5	11	10	32,5	6 550	0,50	**FYT 20 TF/VA201** **FYT 20 TF/VA228**	YAR 204-2FW/VA201 YAR 204-2FW/VA228
25	30	16	124	99	70	12,7	10	36,5	7 800	0,63	**FYT 25 TF/VA201** **FYT 25 TF/VA228**	YAR 205-2FW/VA201 YAR 205-2FW/VA228
30	32,5	13,5	141,5	116,5	80	12,7	10	42,1	11 000	0,93	**FYT 30 TF/VA201** **FYT 30 TF/VA228**	YAR 206-2FW/VA201 YAR 206-2FW/VA228
35	34	14	156	130	92	14	12	46	15 300	1,25	**FYT 35 TF/VA201** **FYT 35 TF/VA228**	YAR 207-2FW/VA201 YAR 207-2FW/VA228
40	39	14	171,5	143,5	102	14	12	53,2	19 000	1,65	**FYT 40 TF/VA201** **FYT 40 TF/VA228**	YAR 208-2FW/VA201 YAR 208-2FW/VA228
45	39	16	179,5	148,5	108	16	14	53,2	21 600	1,80	**FYT 45 TF/VA201** **FYT 45 TF/VA228**	YAR 209-2FW/VA201 YAR 209-2FW/VA228
50	43,5	20	189	157	116	16	14	57,9	23 200	2,15	**FYT 50 TF/VA201** **FYT 50 TF/VA228**	YAR 210-2FW/VA201 YAR 210-2FW/VA228

Y-bearing flanged units with oval housing for extreme temperatures for inch shafts

d 3/4 – 1 15/16 in

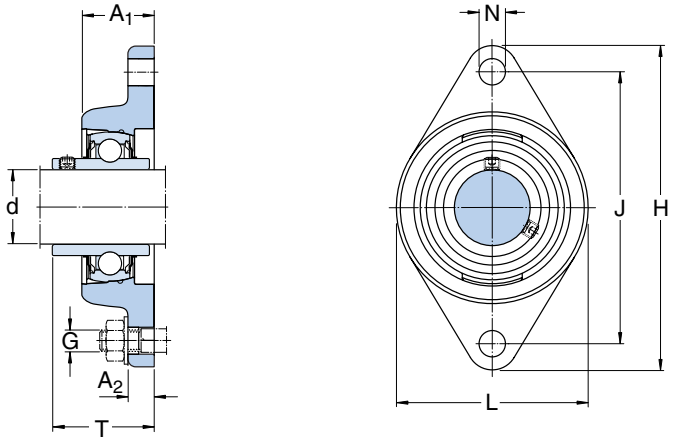

Dimensions									Basic static load rating	Mass	Designations	
											Y-bearing unit	Incorporated Y-bearing
d	A_1	A_2	H	J	L	N	G	T	C_0			
in	mm								N	kg	–	
3/4	24,5	11	112	90	60,5	11	10	31	6 550	0,50	**FYT 3/4 TF/VA201** **FYT 3/4 TF/VA228**	YAR 204-012-2FW/VA201 YAR 204-012-2FW/VA228
1	30	16	124	99	70	12,7	10	34,1	7 800	0,63	**FYT 1. TF/VA201** **FYT 1. TF/VA228**	YAR 205-100.2FW/VA201 YAR 205-100-2FW/VA228
1 3/16	32,5	13,5	141,5	116,5	80	12,7	10	38,1	11 000	0,93	**FYT 1.3/16 TF/VA201** **FYT 1.3/16 TF/VA228**	YAR 206-103-2FW/VA201 YAR 206-103-2FW/VA228
1 1/4	34	14	156	130	92	14	12	42,8	15 300	1,25	**FYT 1.1/4 TF/VA201** **FYT 1.1/4 TF/VA228**	YAR 207-104-2FW/VA201 YAR 207-104-2FW/VA228
1 1/2	39	14	171,5	143,5	102	14	12	49,2	19 000	1,65	**FYT 1.1/2 TF/VA201** **FYT 1.1/2 TF/VA228**	YAR 208-108-2FW/VA201 YAR 208-108-2FW/VA228
1 3/4	39	16	179,5	148,5	108	16	14	49,5	21 600	1,80	**FYT 1.3/4 TF/VA201** **FYT 1.3/4 TF/VA228**	YAR 209-112-2FW/VA201 YAR 209-112-2FW/VA228
1 15/16	43,5	20	189	157	116	16	14	55,6	23 200	2,15	**FYT 1.15/16 TF/VA201** **FYT 1.15/16 TF/VA228**	YAR 210-115-2FW/VA201 YAR 210-115-2FW/VA228

Y-bearings for extreme temperatures
for metric shafts
d **20 – 60** mm

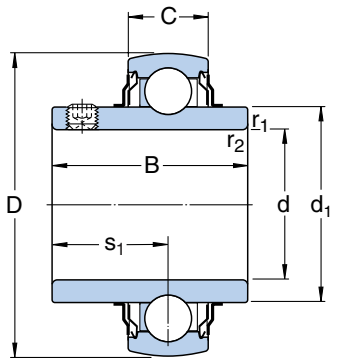

Bearing with graphite cage
VA228 design

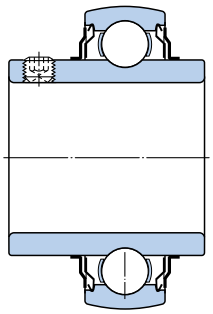

Bearing with pressed steel cage
VA201 design

Dimensions							Basic static load rating	Radial internal clearance		Mass	Designation
d	D	B	C	d_1	s_1	$r_{1,2}$ min	C_0	min	max		
mm							N	µm		kg	–
20	47	31	14	28,2	18,3	0,6	6 550	56	96	0,14	**YAR 204-2FW/VA201** **YAR 204-2FW/VA228**
25	52	34,1	15	33,7	19,8	0,6	7 800	60	105	0,17	**YAR 205-2FW/VA201** **YAR 205-2FW/VA228**
30	62	38,1	18	39,7	22,2	0,6	11 200	60	105	0,28	**YAR 206-2FW/VA201** **YAR 206-2FW/VA228**
35	72	42,9	19	46,1	25,4	1	15 300	80	130	0,41	**YAR 207-2FW/VA201** **YAR 207-2FW/VA228**
40	80	49,2	21	51,8	30,2	1	19 000	80	130	0,55	**YAR 208-2FW/VA201** **YAR 208-2FW/VA228**
45	85	49,2	22	56,8	30,2	1	21 600	90	290	0,60	**YAR 209-2FW/VA201** **YAR 209-2FW/VA228**
50	90	51,6	22	62,5	32,6	1	23 200	90	145	0,69	**YAR 210-2FW/VA201** **YAR 210-2FW/VA228**
55	100	55,6	25	69,1	33,4	1	29 000	110	180	0,94	**YAR 211-2FW/VA201** **YAR 211-2FW/VA228**
60	110	65,1	26	75,6	39,7	1,5	36 000	110	180	1,30	**YAR 212-2FW/VA201** **YAR 212-2FW/VA228**

Y-bearings for extreme temperatures for inch shafts

d 3/4 – 2 7/16 in

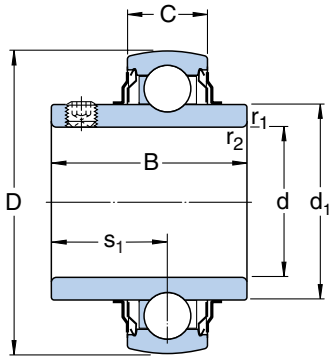

Bearing with graphite cage
VA228 design

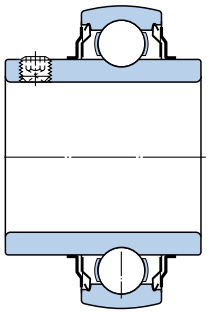

Bearing with pressed steel cage
VA201 design

Dimensions							Basic static load rating	Radial internal clearance		Mass	Designation
d	D	B	C	d_1	s_1	$r_{1,2}$ min	C_0	min	max		
in	mm						N	µm		kg	–
3/4	47	31	14	28,2	18,3	0,6	6 550	56	96	0,14	**YAR 204-012-2FW/VA201** **YAR 204-012-2FW/VA228**
1	52	34,1	15	33,7	19,8	0,6	7 800	60	105	0,17	**YAR 205-100-2FW/VA201** **YAR 205-100-2FW/VA228**
1 3/16	62	38,1	18	39,7	22,2	0,6	11 200	60	105	0,27	**YAR 206-103-2FW/VA201** **YAR 206-103-2FW/VA228**
1 1/4	72	42,9	19	46,1	25,4	1	15 300	80	130	0,46	**YAR 207-104-2FW/VA201** **YAR 207-104-2FW/VA228**
1 1/2	80	49,2	21	51,8	30,2	1	19 000	80	130	0,59	**YAR 208-108-2FW/VA201** **YAR 208-108-2FW/VA228**
1 3/4	85	49,2	22	56,8	30,2	1	21 600	90	290	0,62	**YAR 209-112-2FW/VA201** **YAR 209-112-2FW/VA228**
1 15/16	90	51,6	22	62,5	32,6	1	23 200	90	145	0,71	**YAR 210-115-2FW/VA201** **YAR 210-115-2FW/VA228**
2	100	55,6	25	69,1	33,4	1	29 000	110	180	1,10	**YAR 211-200-2FW/VA201** **YAR 211-200-2FW/VA228**
2 7/16	110	65,1	26	75,6	39,7	1,5	36 000	110	180	1,25	**YAR 212-207-2FW/VA201** **YAR 212-207-2FW/VA228**

The SKF Group – a worldwide corporation

SKF is an international industrial Group operating in some 130 countries and is world leader in bearings.

The company was founded in 1907 following the invention of the self-aligning ball bearing by Sven Wingquist and, after only a few years, SKF began to expand all over the world.

Today, SKF has some 40 000 employees and around 80 manufacturing facilities spread throughout the world. An international sales network includes a large number of sales companies and some 7 000 distributors and retailers. Worldwide availability of SKF products is supported by a comprehensive technical advisory service.

The key to success has been a consistent emphasis on maintaining the highest quality of its products and services. Continuous investment in research and development has also played a vital role, resulting in many examples of epoch-making innovations.

The business of the Group consists of bearings, seals, special steel and a comprehensive range of other high-tech industrial components. The experience gained in these various fields provides SKF with the essential knowledge and expertise required in order to provide the customers with the most advanced engineering products and efficient service.

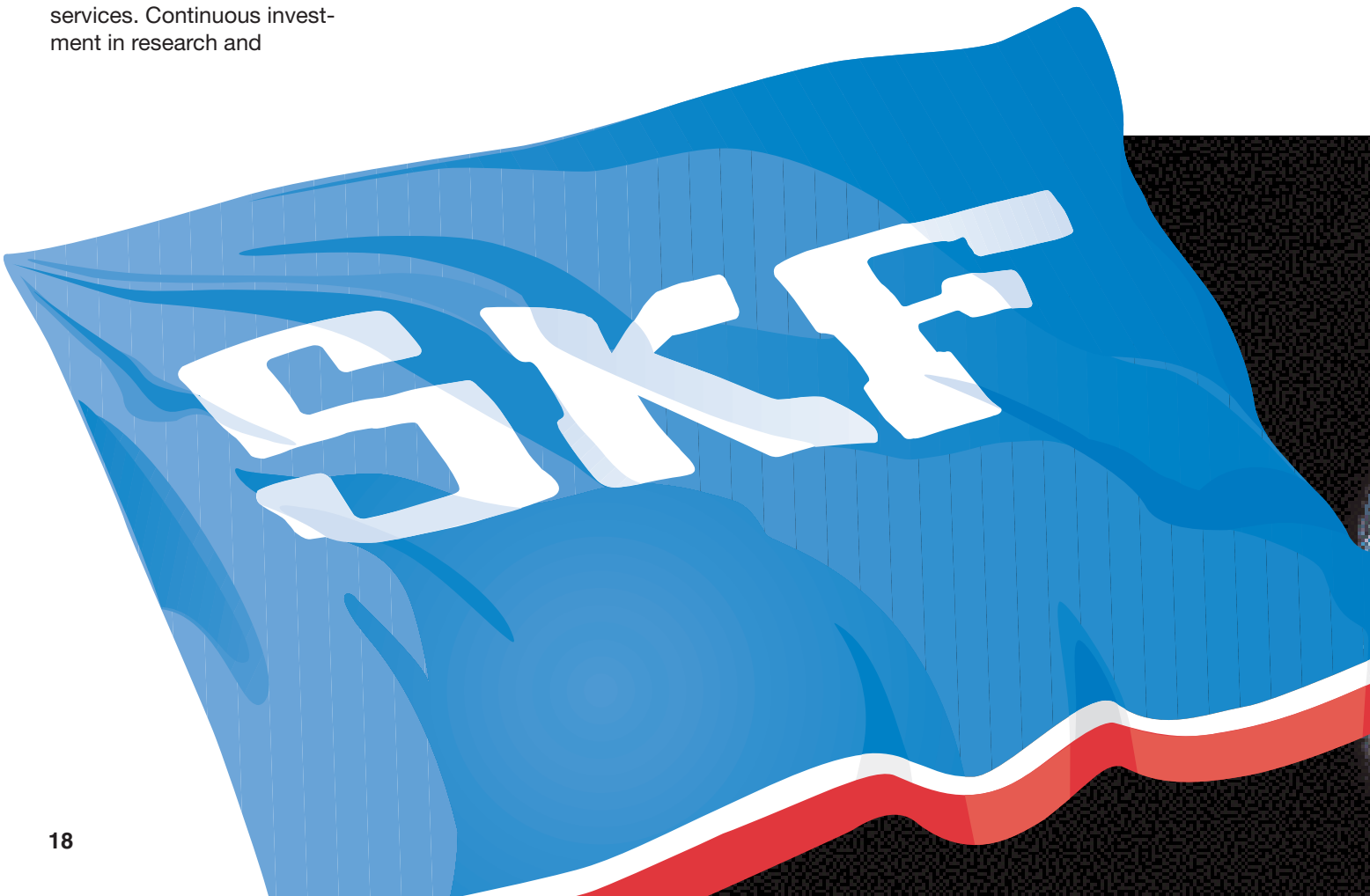



The SKF Group is the first major bearing manufacturer to have been granted approval according to ISO 14001, the international standard for environmental management systems. The certificate is the most comprehensive of its kind and covers more than 60 SKF production units in 17 countries.

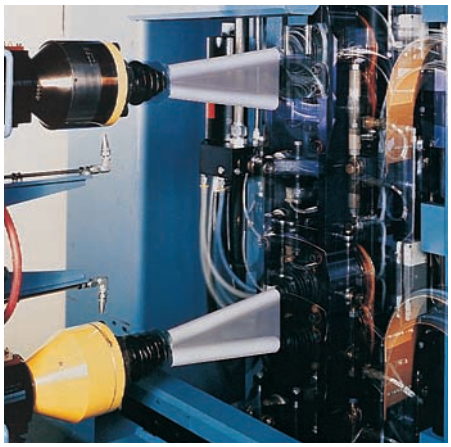

The SKF Engineering & Research Centre is situated just outside Utrecht in The Netherlands. In an area of 17 000 square metres (185 000 sq.ft) some 150 scientists, engineers and support staff are engaged in the further improvement of bearing peformance. They are developing technologies aimed at achieving better materials, better designs, better lubricants and better seals – together leading to an even better understanding of the operation of a bearing in its application. This is also where the SKF Life Theory was evolved, enabling the design of bearings which are even more compact and offer even longer operational life.



SKF has developed the Channel concept in factories all over the world. This drastically reduces the lead time from raw material to end product as well as work in progress and finished goods in stock. The concept enables faster and smoother information flow, eliminates bottlenecks and bypasses unnecessary steps in production. The Channel team members have the knowledge and commitment needed to share the responsibility for fulfilling objectives in areas such as quality, delivery time, production flow etc.

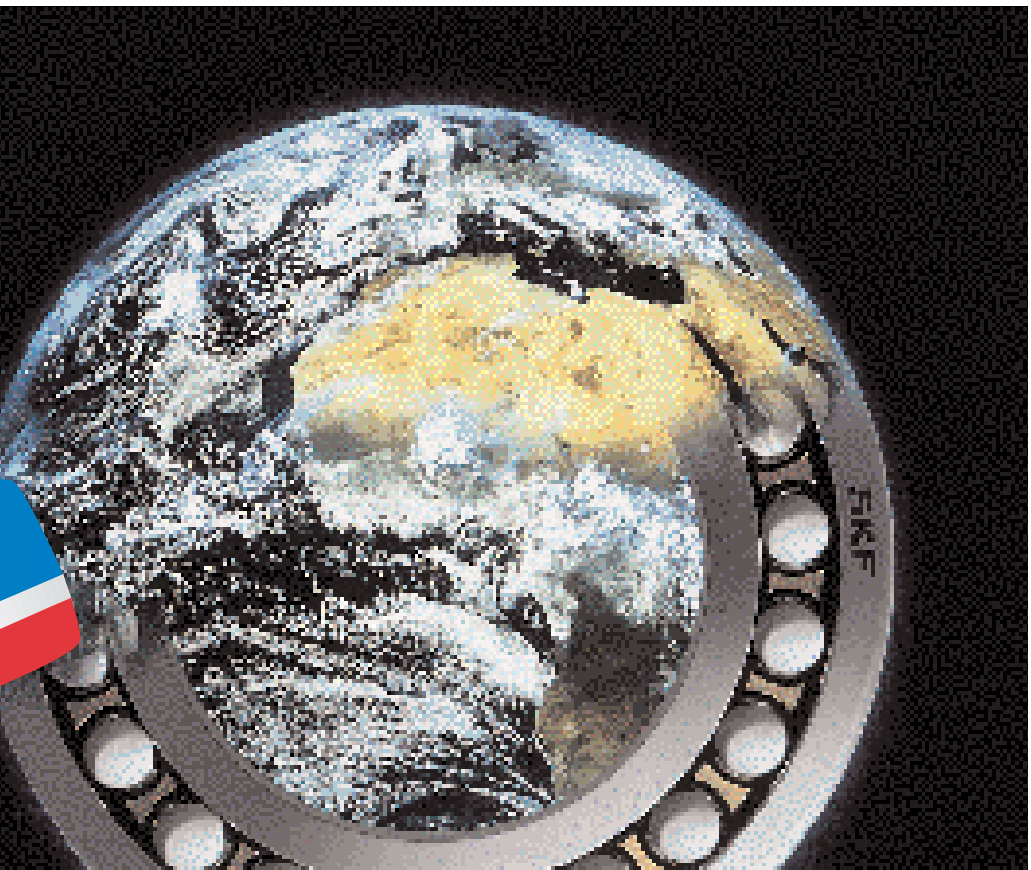

SKF manufactures ball bearings, roller bearings and plain bearings. The smallest are just a few millimetres (a fraction of an inch) in diameter, the largest several metres. SKF also manufactures bearing and oil seals which prevent dirt from entering and lubricant from leaking out. SKF's subsidiaries CR and RFT S.p.A. are among the world's largest producers of seals.

© Copyright SKF 2000
The contents of this publication are the copyright of the publisher and may not be reproduced (even extracts) unless permission is granted. Every care has been taken to ensure the accuracy of the information contained in this publication but no liability can be accepted for any loss or damage whether direct, indirect or consequential arising out of the use of the information contained herein.

Publication **4415/I E**

Printed in Sweden on environmentally friendly, chlorine-free paper (Multiart Silk) by Certus Tryckeri AB.