Brand of NTN corporation

Technical data

EXPE215

Bearing units



Grey cast housing, radial insert ball bearing with eccentric locking collar, seal with slinger

KIT CONTENT

EX215G2, PE215

VISUAL (S)

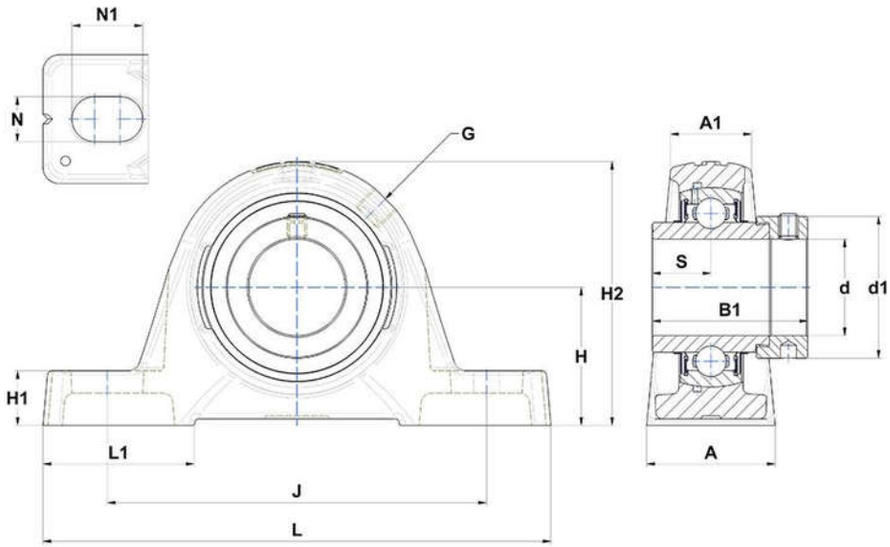

PRODUCT DEFINITION

Brand	SNR
A - Housing width	66 mm
A1 - Housing top width	48 mm
B - Width of Inner Ring	74,6 mm
d - Shaft diameter	75 mm
d1 - Outer dia of eccent. Lock. collar / nut of adapter sleeve	102 mm

PRODUCT DEFINITION	
G - Grease fitting	R1/8"
H - Distance mounting base to centerline spheric. seating diam.	82,5 mm
H1 - Housing foot height	27,5 mm
H2 - Housing height	164 mm
J - Mounting holes distance	210 mm
L - Housing length	265 mm
L1 - Housing foot length	78 mm
N - Mounting hole dimension	22 mm
N1 - Mounting hole length	30 mm
S - Distance front side/bearing centre	37,3 mm

PRODUCT PERFORMANCE	
C - Dynamic load rating	66000000 mN
C0 - Static load rating	49500000 mN
Operating temperature min.	253,15 °K
Operating temperature max.	373,15 °K

OTHER FEATURES	
Mass	7,54 kg
Recommended tightening torque for set screw	22 N-m