268 HANDHELD CASES
292 UNIVERSAL PLASTIC ENCLOSURES
317 HEAVY DUTY AND ELECTRICAL ENCLOSURES
341 DEVELOPMENT BOARD ENCLOSURES
369 VERSATILE IOT AND SENSOR ENCLOSURES

2000 Series General Purpose ABS Enclosure

Product overview

Extensive range of electronic enclosures with solid ABS lid, designed for a broad range of applications.

- Lid and base moulded in ABS
- Brass inserts in base for repetitive removal of the lid (*except for 2000, 2007 or 2008 sizes)
- High gloss polished finish
- Excellent properties for machining
- Integral mounting guides to accept 1.6mm PCBs
- Available in other colours on request (subject to MOQ)
- 2000 series has been designed to meet the requirements of IP54

BIM2000



BIM2001



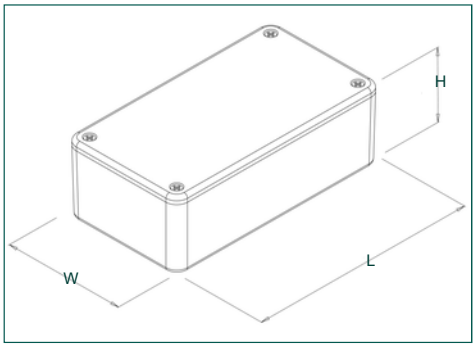

SPECIFICATION	
Materials	Lid and base high impact ABS UL94-HB
Operating temperature	-5°C to 80°C
Protection class	2000 series has been designed to meet the requirements of IP54
Standard colours	Grey (GY), black (BLK), white (WH)
Standard unit includes	Base and lid Lid screws as below Required torque setting 10 cNm (0.1Nm)
Options (MOQs apply)	Different colours / materials / UL94-V0
Available accessories	BIM adapter (PCB adapter for horizontal PCB mounting) BIM stap (only fits BIM2006/16)

GREY	BLACK	WHITE	SCREWS	LENGTH	WIDTH	HEIGHT
*BIM2008/18-GY/GY	*BIM2008/18-BLK/BLK	*BIM2008/18-WH/WH	No2 x 5/16 CSK self tapping x 4pcs	55mm	55mm	42mm
*BIM2000/10-GY/GY	*BIM2000/10-BLK/BLK	*BIM2000/10-WH/WH	No2 x 5/16 CSK self tapping x 4pcs	75mm	50mm	27mm
BIM2001/11-GY/GY	BIM2001/11-BLK/BLK	BIM2001/11-WH/WH	M3 x 10 CSK pozi screws x 4pcs	85mm	56mm	39mm
BIM2002/12-GY/GY	BIM2002/12-BLK/BLK	BIM2002/12-WH/WH	M3 x 10 CSK pozi screws x 4pcs	100mm	50mm	25mm
BIM2003/13-GY/GY	BIM2003/13-BLK/BLK	BIM2003/13-WH/WH	M3 x 10 CSK pozi screws x 4pcs	112mm	62mm	31mm
*BIM2007/17-GY	BIM2007/17-BLK	BIM2007/17-WH/WH	No2 x 5/16 CSK self tapping x 4pcs	112mm	62mm	31mm
BIM2004/14-GY/GY	BIM2004/14-BLK/BLK	BIM2004/14-WH/WH	M3 x 10 CSK pozi screws x 4pcs	120mm	65mm	40mm
RTM2030/30-GY	RTM2030/30-BLK	RTM2030/30-WH/WH	M3 x 10 CSK pozi screws x 4pcs	142mm	80mm	30mm
BIM2005/15-GY/GY	BIM2005/15-BLK/BLK	BIM2005/15-WH	M3 x 10 CSK pozi screws x 4pcs	150mm	80mm	50mm
BIM2006/16-GY/GY	BIM2006/16-BLK/BLK	BIM2006/16-WH/WH	M3 x 10 CSK pozi screws x 6pcs	190mm	110mm	60mm
BIM2009/19-GY/GY	BIM2009/19-BLK/BLK	BIM2009/19-WH/WH	M3 x 10 CSK pozi screws x 8pcs	250mm	200mm	65mm

*Brass inserts not included in 2000, 2007 or 2008 sizes

KEY FEATURES

Polished finish | Horizontal PCB mounting | Moulded in ABS

CUSTOMISE ME PRINTING

CUSTOMISE ME DRILLING

+44 (0)1638 716101 | sales@camdenboss.com | www.camdenboss.com

We operate a constant improvement policy, our products are subject to change without notice.

Vers 4

bsi ISO 9001 Quality Management Systems CERTIFIED FM 28614

268 HANDHELD CASES
292 UNIVERSAL PLASTIC ENCLOSURES
317 HEAVY DUTY AND ELECTRICAL ENCLOSURES
341 DEVELOPMENT BOARD ENCLOSURES
369 VERSATILE IOT AND SENSOR ENCLOSURES

2000 Series General Purpose ABS Enclosure - Flanged

Product overview

For applications requiring surface or wall mounting and protection against dust and water ingress. Provides extra security once mounted by restricting access to the screws in the lid.

- Flanged lid and base moulded in ABS
- High gloss polished finish
- Brass inserts in base for repetitive removal of the lid (*except for 2000 or 2008 sizes)
- Excellent properties for machining
- Integral mounting guides to accept 1.6mm PCBs
- Plastic standoffs in lid for PCB mounting
- Available in other colours on request (subject to MOQ)
- 2000 series flanged has been designed to meet the requirements of IP54 and IP65 with gasket accessory

BIM2000





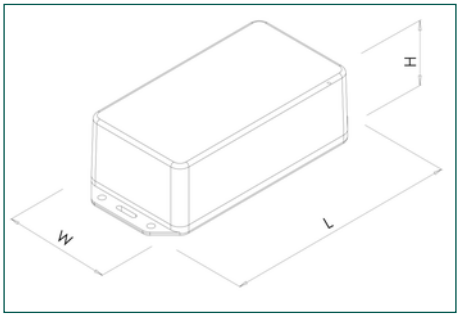

SPECIFICATION	
Materials	Lid and base high impact ABS UL94-HB
Operating temperature	-5°C to 80°C
Protection class	2000 series flanged has been designed to meet the requirements of IP54 or additionally, IP65 with the gasket accessory
Standard colours	Grey (GY) and black (BLK)
Standard unit includes	Base and flanged lid Lid screws as below Required torque setting 10 cNm (0.1Nm)
Options (MOQs apply)	Different colours / materials / UL94-V0
Available accessories	IP65 gasket kits BIM adapter (PCB adapter for horizontal PCB mounting) BIM stap (only fits BIM2006/16)

GREY	BLACK	SCREWS	LENGTH	WIDTH	HEIGHT
*BIM2008/IP-GY	*BIM2008/IP-BLK	No2 x 5/16 CSK self tapping x 4pcs	78.3mm	57.3mm	43mm
*BIM2000/IP-GY	*BIM2000/IP-BLK	No2 x 5/16 CSK self tapping x 4pcs	99mm	52mm	28mm
BIM2001/IP-GY	BIM2001/IP-BLK	M3 x 10 CSK pozi screws x 4pcs	105mm	58mm	39.5mm
BIM2002/IP-GY	BIM2002/IP-BLK	M3 x 10 CSK pozi screws x 4pcs	123mm	52mm	25.5mm
BIM2003/IP-GY	BIM2003/IP-BLK	M3 x 10 CSK pozi screws x 4pcs	136mm	64.6mm	31.5mm
BIM2004/IP-GY	BIM2004/IP-BLK	M3 x 10 CSK pozi screws x 4pcs	143.3mm	67.3mm	40.3mm
BIM2030/IP-GY	BIM2030/IP-BLK	M3 x 10 CSK pozi screws x 4pcs	167mm	84mm	31mm
BIM2005/IP-GY	BIM2005/IP-BLK	M3 x 10 CSK pozi screws x 4pcs	173.4mm	82.4mm	50.5mm
BIM2006/IP-GY	BIM2006/IP-BLK	M3 x 10 CSK pozi screws x 6pcs	213mm	112.3mm	60.7mm

*Brass inserts not included in 2000 or 2008 sizes

IP65 gasket kits

PART NO.	DESCRIPTION
SA00	2000/IP gasket kit
SA1-5	2001/IP, 2002/IP, 2003/IP, 2004/IP, 2005/IP, 2030/IP gasket kit
SA6	2006/IP gasket kit
SA8	2008/1P gasket kit

KEY FEATURES

IP65 flanged lid | PCB mounting | Base moulded in ABS

CUSTOMISE ME · PRINTING

CUSTOMISE ME · DRILLING

268 HANDHELD CASES
292 UNIVERSAL PLASTIC ENCLOSURES
317 HEAVY DUTY AND ELECTRICAL ENCLOSURES
341 DEVELOPMENT BOARD ENCLOSURES
369 VERSATILE IOT AND SENSOR ENCLOSURES

2000 Series General Purpose ABS Enclosure - Deep Profile

Product overview

Multi-purpose enclosures for application where extra height is required. The deep profile 2000 series provides increased internal volume.

- Deep profile lid and base moulded in ABS
- Brass inserts in base for repeated removal of the lid
- Excellent properties for machining
- Integral mounting guides in base to accept 1.6mm PCB's
- Available in other colours on request (subject to MOQ)
- 2000 series has been designed to meet the requirements of IP54

BIM2005/25



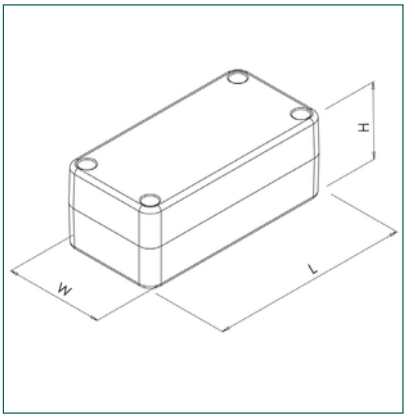

SPECIFICATION	
Materials	Lid and base high impact ABS UL94-HB
Operating temperature	-5°C to 80°C
Protection class	2000 series has been designed to meet the requirements of IP54
Standard colours	Grey (GY), black (BLK), white (WH)
Standard unit includes	Base and deep profile lid Lid screws as below Required torque setting 10 cNm (0.1Nm)
Options (MOQs apply)	Different colours / materials / UL94-V0
Available accessories	BIM adapter (PCB adapter for horizontal PCB mounting) BIM stap (only fits BIM2006/16)

GREY	BLACK	WHITE	SCREWS	LENGTH	WIDTH	HEIGHT
BIM2002/22-GY/GY	BIM2002/22-BLK/BLK	BIM2002/22-WH/WH	M3 x 10 CSK pozi screws x 4pcs	100mm	50mm	40mm
BIM2004/24-GY/GY	BIM2004/24-BLK/BLK	BIM2004/24-WH/WH	M3 x 10 CSK pozi screws x 4pcs	120mm	65mm	60mm
BIM2005/25-GY/GY	BIM2005/25-BLK/BLK	BIM2005/25-WH/WH	M3 x 10 CSK pozi screws x 4pcs	150mm	80mm	76mm
BIM2006/26-GY/GY	BIM2006/26-BLK/BLK	BIM2006/26-WH/WH	M3 x 10 CSK pozi screws x 6pcs	190mm	110mm	90mm

+44 (0)1638 716101 | sales@camdenboss.com | www.camdenboss.com

We operate a constant improvement policy, our products are subject to change without notice.
Vers 3
ISO 9001 Quality Management Systems
Vers 3

268 HANDHELD CASES
292 UNIVERSAL PLASTIC ENCLOSURES
317 HEAVY DUTY AND ELECTRICAL ENCLOSURES
341 DEVELOPMENT BOARD ENCLOSURES
369 VERSATILE IOT AND SENSOR ENCLOSURES

2000 Series General Purpose ABS Enclosure - EMC

Product overview

A range of enclosures with conductive coating for enhanced electro-magnetic compatibility (EMC).

- Lid and base moulded in ABS
- Graphite grey paint finish
- Conductive coating
- Brass inserts in base for repetitive removal of the lid (*except for 2000, 2007 or 2008 sizes)
- Excellent properties for machining
- Integral mounting guides to accept 1.6mm PCBs
- 2000 series has been designed to meet the requirements of IP54

BIM2001

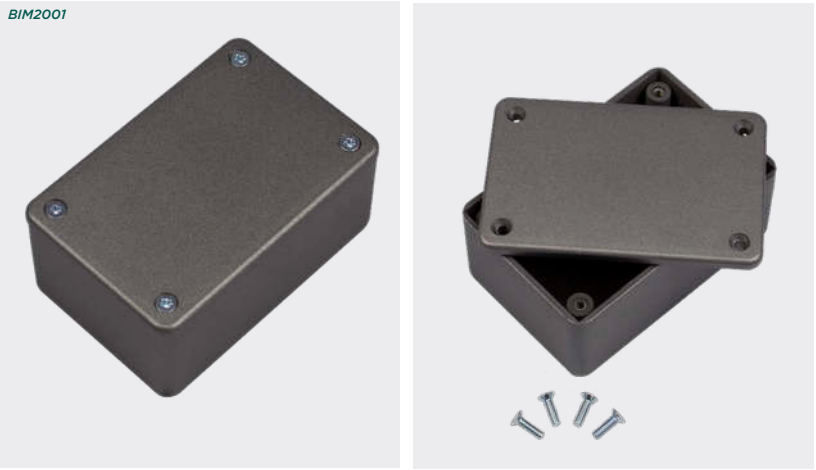

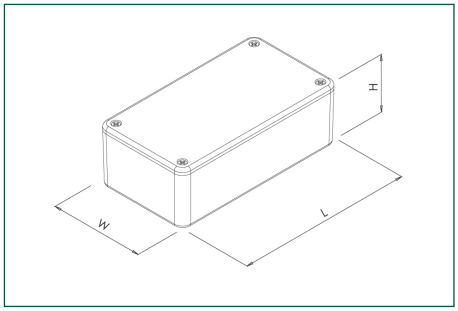

SPECIFICATION	
Materials	Lid and base high impact ABS UL94-HB
Operating temperature	-5°C to 80°C
Protection class	2000 series has been designed to meet the requirements of IP54
Standard colours	Graphite grey
Standard unit includes	Base and lid Lid screws as below Required torque setting 10 cNm (0.1Nm)
Options (MOQs apply)	Different colours / materials / UL94-V0
Available accessories	BIM adapter (PCB adapter for horizontal PCB mounting) BIM stap (only fits BIM2006/16)

GREY	SCREWS	LENGTH	WIDTH	HEIGHT
*BIM2008/18-EMI/RFI	No2 x 5/16 CSK self tapping x 4pcs	55mm	55mm	42mm
*BIM2000/10-EMI/RFI	No2 x 5/16 CSK self tapping x 4pcs	75mm	50mm	27mm
BIM2001/11-EMI/RFI	M3 x 10 CSK pozi screws x 4pcs	85mm	56mm	39mm
BIM2002/12-EMI/RFI	M3 x 10 CSK pozi screws x 4pcs	100mm	50mm	25mm
BIM2003/13-EMI/RFI	M3 x 10 CSK pozi screws x 4pcs	112mm	62mm	31mm
*BIM2007/17-EMI/RFI	No2 x 5/16 CSK self tapping x 4pcs	112mm	62mm	31mm
BIM2004/14-EMI/RFI	M3 x 10 CSK pozi screws x 4pcs	120mm	65mm	40mm
BIM2005/15-EMI/RFI	M3 x 10 CSK pozi screws x 4pcs	150mm	80mm	50mm
BIM2006/16-EMI/RFI	M3 x 10 CSK pozi screws x 6pcs	190mm	110mm	60mm
BIM2009/19-EMI/RFI	M3 x 10 CSK pozi screws x 8pcs	250mm	200mm	65mm

*Brass inserts not included in 2000, 2007 or 2008 sizes

KEY FEATURES

Conductive graphite paint finish | Shielded | Moulded in ABS

CUSTOMISE ME · PRINTING

CUSTOMISE ME · DRILLING

ACCESSORIES

BIM adapter

- For horizontal PCB mounting
- Suitable for all BIM2000 series enclosures

PART NO.	DESCRIPTION
BIM/ADAPTER	BIM adapter (PCB adapter for horizontal PCB mounting)
BIM STRAP BLK	BIM Strap for BIM2006 black
BIM STRAP GY	BIM Strap for BIM2006 grey
BIM STRAP WH	BIM Strap for BIM2006 white

