Product data sheet
Characteristics

XCRB11
limit switch XCR - metal spring return rod lever square rod 6 mm - 2X(1NC+NO)

Product availability : Non-Stock - Not normally stocked in distribution facility

Price* : 397.00 USD



Main

Range of product	OsiSense XC
Series name	Special format
Product or component type	Limit switch
Product specific application	For hoisting and mechanical handling applications
Device short name	XCR
Sensor design	-
Body type	Fixed
Head type	Rotary head
Material	Metal
Fixing mode	By the body
Movement of operating head	Rotary
Type of operator	Metal spring return rod lever (square rod 6 mm)
Type of approach	2 directions lateral approach
Electrical connection	Screw-clamp terminals, clamping capacity: 1 x 0.34...2 x 1.5 mm²
Number of poles	4
Contacts type and composition	2 x (1 NC + 1 NO)
Contact operation	Snap action
Contact block per direction [control circuit]	1 per direction
Positive opening	With

Complementary

Body material	Zinc alloy
Switch actuation	By any moving part
Cable entry	1 entry tapped for Pg 13.5 cable gland, cable outer diameter: 0.35...0.47 in (9...12 mm) conforming to NF C 68-300

Disclaimer: This documentation is not intended as a substitute for and is not to be used for determining suitability or reliability of these products for specific user applications

Contacts insulation form	Zb
Number of steps	1
Positive opening minimum torque	6.64 lbf.in (0.75 N.m)
Minimum torque for tripping	3.98 lbf.in (0.45 N.m)
Minimum actuation speed	0.01 m/min
Maximum actuation speed	4.92 ft/s (1.5 m/s)
Maximum displacement angle	55 ° -55 °
Contact code designation	A300, AC-15 240 V, Ie = 3 A) conforming to EN/IEC 60947-5-1 appendix A Q300, DC-13 250 V, Ie = 0.27 A) conforming to EN/IEC 60947-5-1 appendix A
[Ui] rated insulation voltage	300 V conforming to CSA C22.2 No 14 500 V degree of pollution 3 conforming to IEC 60947-1 500 V degree of pollution 3 conforming to VDE 0110 300 V conforming to UL 508
Resistance across terminals	<= 25 MOhm conforming to IEC 60255-7 category 3
[Uimp] rated impulse withstand voltage	6 kV conforming to IEC 60664 6 kV conforming to IEC 60947-1
Short-circuit protection	10 A by gG cartridge fuse
Electrical durability	5000000 cycles, DC-13 inductive load type, 120 V, 4 W, load factor: 0.5, operating rate: <= 60 cyc/mn IEC 60947-5-1 appendix C 5000000 cycles, DC-13 inductive load type, 24 V, 7 W, load factor: 0.5, operating rate: <= 60 cyc/mn IEC 60947-5-1 appendix C 5000000 cycles, DC-13 inductive load type, 48 V, 10 W, load factor: 0.5, operating rate: <= 60 cyc/mn IEC 60947-5-1 appendix C
Mechanical durability	10000000 cycles
Width	3.35 in (85 mm)
Height	3.74 in (95 mm)
Depth	2.95 in (75 mm)
Product weight	2.45 lb(US) (1.11 kg)
Terminals description ISO n°1	(13-14)NO (21-22)NC

Environment

Shock resistance	68 gn conforming to IEC 60068-2-27
Vibration resistance	9 gn (f = 10...500 Hz) conforming to IEC 60068-2-6
IP degree of protection	IP54 conforming to IEC 60529
Overvoltage category	Class I conforming to NF C 20-030 Class I conforming to IEC 61140
Ambient air temperature for operation	-13...158 °F (-25...70 °C)
Ambient air temperature for storage	-40...158 °F (-40...70 °C)
Protective treatment	TC
Product certifications	CCC CSA
Standards	EN 60204-1 EN 60947-5-1 IEC 60204-1 IEC 60947-5-1 NF C 79-130 CSA C22.2 No 14

Ordering and shipping details

Category	22449 - LIMIT SWITCHES,ACCESSORIES
Discount Schedule	T
GTIN	003389110652109
Nbr. of units in pkg.	1
Package weight(Lbs)	2.3599999999999999
Returnability	N
Country of origin	FR

Offer Sustainability

Sustainable offer status	Green Premium product
RoHS (date code: YYWW)	Compliant - since 1402 - Schneider Electric declaration of conformity Schneider Electric declaration of conformity
REACh	Reference not containing SVHC above the threshold Reference not containing SVHC above the threshold
Product end of life instructions	Need no specific recycling operations

Contractual warranty

Warranty period	18 months

XCRB11

Dimensions

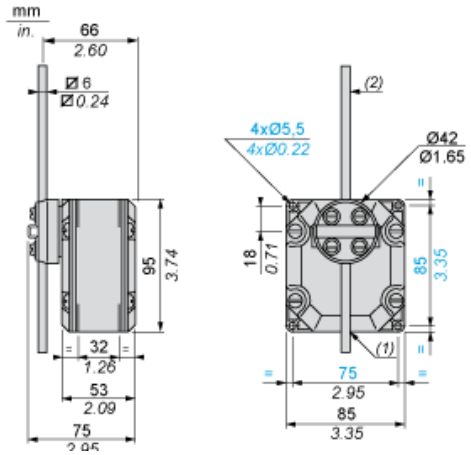

(1) 1 tapped entry for n° 13 cable gland.
(2) Rod length: 200 mm.

Wiring Diagram

Two 2-pole NC + NO Snap Action

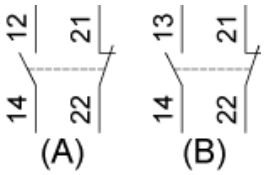

(A) 1st contact
(B) 2nd contact

Functionnal Diagram

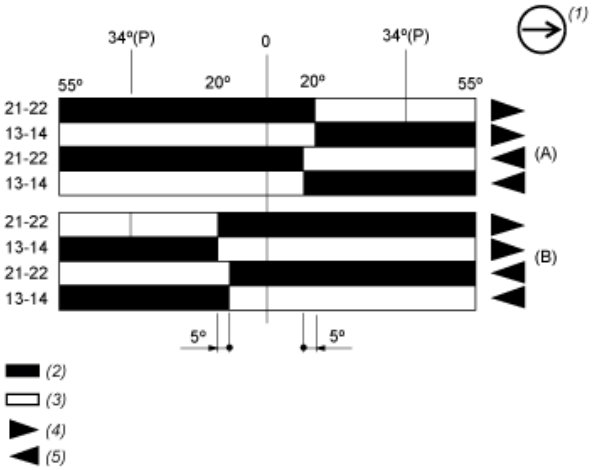

(P) Positive opening point
(A) 1st contact
(B) 2nd contact
(1) NC contact with positive opening operation
(2) Closed
(3) Open
(4) Tripping
(5) Resetting