PP7550

Pressure switch with ceramic measuring cell

PP-400-SBG14-QFPKG/US/ /V

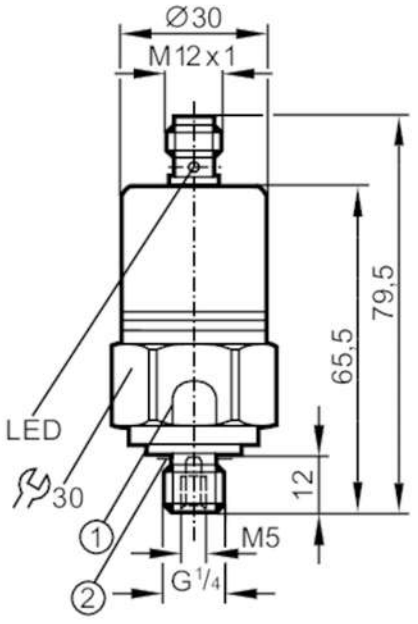

1 pressure relief mechanism
- No mechanical force must be exerted on the pressure relief mechanism.
2 Sealing

Product characteristics				
Number of inputs and outputs		Number of digital outputs: 2		
Measuring range		0...400 bar	0...5800 psi	0...40 MPa
Process connection		threaded connection G 1/4 external thread internal thread:M5		
Application				
Application		for industrial applications		
Media		liquids and gases		
Conditionally suitable for		use in gases at pressures > 25 bar only on request		
Medium temperature	[°C]	-25...90		
Min. bursting pressure		1000 bar	14500 psi	100 MPa
Pressure rating		600 bar	8700 psi	60 MPa
Type of pressure		relative pressure		
Electrical data				
Operating voltage	[V]	9.6...36 DC; (communication mode: 18...32)		
Current consumption	[mA]	< 45		
Min. insulation resistance	[MΩ]	100; (500 V DC)		
Protection class		III		
Reverse polarity protection		yes		
Power-on delay time	[s]	0.3		
Inputs / outputs				
Number of inputs and outputs		Number of digital outputs: 2		
Outputs				
Total number of outputs		2		

PP7550

Pressure switch with ceramic measuring cell

PP-400-SBG14-QFPKG/US/ /V

Output signal	switching signal; IO-Link; (configurable)		
Electrical design	PNP		
Number of digital outputs	2		
Output function	normally open / normally closed; (parameterisable)		
Max. voltage drop switching output DC [V]	2		
Permanent current rating of switching output DC [mA]	250		
Switching frequency DC [Hz]	170		
Short-circuit protection	yes		
Type of short-circuit protection	pulsed		
Overload protection	yes		
Measuring/setting range			
Measuring range	0...400 bar	0...5800 psi	0...40 MPa
Set point SP	4...400 bar	60...5790 psi	0.4...40 MPa
Reset point rP	2...398 bar	30...5760 psi	0.2...39.8 MPa
In steps of	2 bar	30 psi	0.2 MPa
Factory setting		SP1 = 100 bar	rP1 = 92 bar
		SP2 = 300 bar	rP2 = 292 bar
		OUT1 = Hno	OUT2 = Hno
Accuracy / deviations			
Switch point accuracy [% of the span]	< ± 0,5		
Repeatability [% of the span]	< ± 0,1; (with temperature fluctuations < 10 K)		
Characteristics deviation [% of the span]	< ± 0,25 (BFSL) / < ± 0,5 (LS); (BFSL = Best Fit Straight Line; LS = limit value setting)		
Hysteresis deviation [% of the span]	< ± 0,1		
Long-term stability [% of the span]	< ± 0,1; (per year)		
Temperature coefficient zero point [% of the span / 10 K]	< ± 0,2; (0...80 °C)		
Temperature coefficient span [% of the span / 10 K]	< ± 0,2; (0...80 °C)		
Response times			
Response time [ms]	< 3		
Damping process value dAP in steps [s]	0,003 - 0,006 - 0,010 - 0,017 - 0,060 - 0,125 - 0,250 - 0,500		
Interfaces			
Communication interface	IO-Link		
Transmission type	COM2 (38,4 kBaud)		
IO-Link revision	1.0		
Profiles	no profile		
SIO mode	yes		
Required master port type	A		

PP7550

Pressure switch with ceramic measuring cell

PP-400-SBG14-QFPKG/US/ /V

Process data analogue		1	
Process data binary		2	
Min. process cycle time	[ms]	2.3	
Supported DeviceIDs		**Type of operation**	**DeviceID**
		default	2
Operating conditions			
Ambient temperature	[°C]	-25...85	
Storage temperature	[°C]	-40...100	
Protection		IP 68; (7 days / 1 m water depth / 0.1 bar)	
Tests / approvals			
EMC		immunity	EN 61000-6-2
		EN 61000-4-2 ESD	4 kV contact discharge / 15 kV air discharge
		EN 61000-4-3 HF radiated	20 V/m
		EN 61000-4-4 Burst	4 kV coupling clamp
		EN 61000-4-5 Surge	0,5 kV supply / 1 kV signal for DC units
		EN 61000-4-6 HF conducted	10 V
		immunity	according to the automotive directive 1995/54/EC / 04/104EG / 05/83/EG
		absorber chamber test to ISO 11452-2:	80 V/m
		EN 50155	Klasse T3, C1, S1
Shock resistance		DIN IEC 60068-2-27 / DIN IEC 60068-2-29	1000 g
		DIN EN 61373	category 3
Vibration resistance		DIN IEC 68-2-6	20 g (10...2000 Hz)
		DIN EN 60068-2-64	14 g
		DIN EN 61373	category 2
MTTF	[years]	310	
Pressure Equipment Directive		Sound engineering practice; can be used for group 2 fluids; group 1 fluids on request	
Mechanical data			
Weight	[g]	218	
Housing		cylindrical	
Dimensions	[mm]	Ø 30 / L = 79.5	
Materials		stainless steel (304/1.4301); FKM; EPDM/X; PA	
Materials (wetted parts)		stainless steel (303/1.4305); ceramics; FKM	
Min. pressure cycles		100 million	
Process connection		threaded connection G 1/4 external thread internal thread:M5	
Restrictor element integrated		yes	
Displays / operating elements			
Display		operation	2 x LED, green
		switching status	2 x LED, yellow
Teach function		yes	
Remarks			
Pack quantity		1 pcs.	

PP7550

Pressure switch with ceramic measuring cell

PP-400-SBG14-QFPKG/US/ /V

Electrical connection

Connector: 1 x M12; coding: A

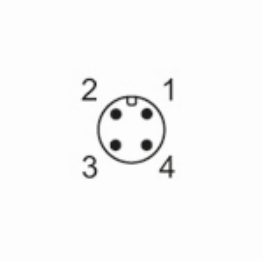

Connection

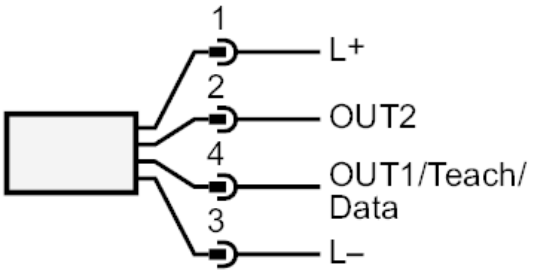

OUT1	switching output
OUT2	switching output Diagnostic output