

Subject to technical modification without notice. Typographical and other errors do not justify any claim for damages.
Stand: 11/98 e *Copyright © 1998 OKW Gehäusesysteme KG Germany (http://www.okw.com)*

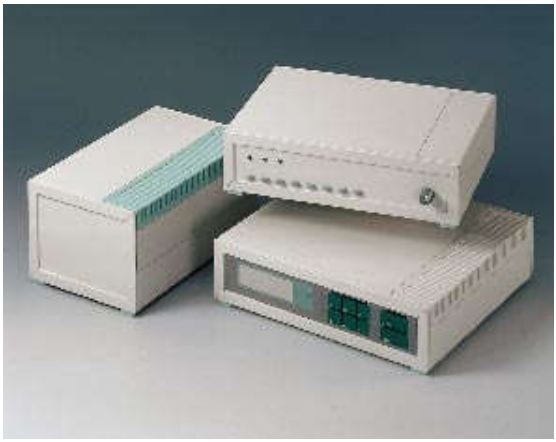

FUNCTION-ORIENTATED. UNIQUE SQUARE DESIGN.

Another step forward in case design from OKW. This spacious case system will accommodate and enhance high quality electronic systems.

Three sizes with variable heights and ideally suitable for housing equipment of all kinds. The internal mounting pillars are positioned for Eurocard size PCBs – single, double and extended.

Highly stable construction with stiffening ribs.

Textured plastic front panels in the same colour as the case, easily machined for controls. Recessed, vertical guide positions for fitting additional mounting plates behind the front panel. Unique side trims in off-white or lagoon, with or without ventilation slots.

The plain case surfaces facilitate easy cleaning and maintenance work.

Available in three versions:

- MEDITEC D220 for Eurocards double/extended
- MEDITEC D160 for Eurocards double/normal
- MEDITEC E220 for Eurocards single/extended

APPLICATIONS

Medical field and laboratory technology, feedback control, measuring and control technology, computer peripherals, modems and interfaces, data collection.



HIGH STABILITY

With re-inforcing grid.



SIDE PANELS

Available as an accessory to increase the height by 50 mm.

MODIFICATIONS AS PER CUSTOMER'S REQUIREMENTS

Machining is carried out efficiently on modern CNC-controlled systems. Special colours. Silk-screen and tampo printing etc.

STANDARD COLOURS

Case shell, side panels and front panel, off-white, RAL 9002.

Side trims optionally available in off-white, RAL 9002 or lagoon, NCS 1030-B70G.

Slightly textured surface.

SPECIAL COLOURS

Any desired colour.

MATERIAL

ABS (UL 94 HB).

PROTECTION CLASS IP 40

SUPPLY

Optionally available as
– complete case consisting of two L-shells, two side trims, case feet and assembly kit
or
– in the form of single case components, paired.

Accessories are separately available.

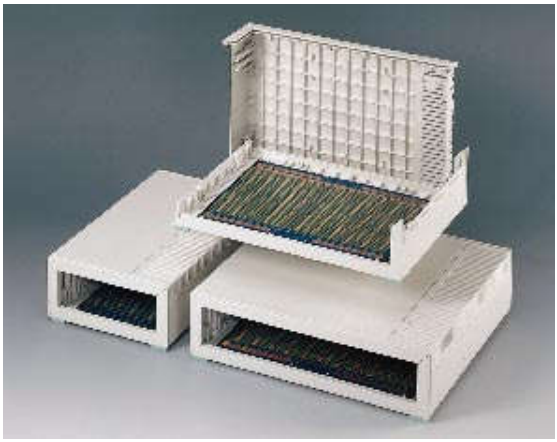



CONVINCING DESIGN FEATURES.

Innovative combination of case components due to L-shell technology with mitre joints.

Identical surface finish on shells as well as front panels.

Clear, square form with a minimum amount of mould-parting lines. Ideal for machining.

The panels provided with ventilation meet the requirements of protection against accidental contact.

Non-slipping feet in new design and material will not leave any traces.

SIZES

Outside dimensions in mm

MEDITEC	L	W	H
D220	290	260	74
	290	260	124*
D160	290	200	74
	290	200	124*
E220	160	260	74
	160	260	124*

* Case shells combined with 50 mm height side panel (accessory).

CORPORATE DESIGN

The user determines the final appearance of his equipment due to a choice of the side trims and intermediate parts.

Fitting out your equipment in your special colours will provide your products with the look of your corporate identity.



SIDE TRIMS

With and without ventilation, easily fitted.

MEDITEC D220

MEDITEC D220 – case dimension ideally suited to accommodate double-Eurocards 233.4 x 220 mm.

VERSION I

Complete case,
side trims with ventilation,
colour off-white.

VERSION II

Complete case,
side trims with ventilation,
colour lagoon.

VERSION III

Complete case,
side trims without ventilation,
colour off-white.

VERSION IV

Complete case,
side trims without ventilation,
colour lagoon.



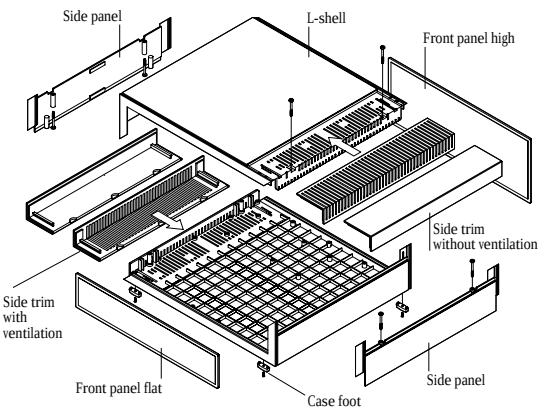

DESIGN

L-shell technology. Two identical shells are joint together so that they overlap. The grid provides a high amount of stability. Fastening towers have been positioned for mounting Eurocards. Injection moulded front panels (accessory) in case colour, easily machined. Recessed, vertical guides for further assembly or installation of front panels. The height can be increased by 50 mm when fitting the accessory side panels. Side trims optionally available with or without ventilation.

ASSEMBLY

L-shells and side panels are mounted with self-tapping screws of stainless steel. The side trims are attached laterally and keep their position independently. Non-slipping case feet are fixed by screws to ensure a firm and stable support.

ORDER DETAILS COMPLETE CASE

Part No.	MEDITEC	Outside dimensions in mm			Supply		
		L	W	H	L-shells	Side trims	Assembly Kit + Feet
B 22 10 007	D220, Version I	290	260	74	2 pcs., off-white	2 pcs., with ventilation, off-white	included
B 22 10 005	D220, Version II	290	260	74	2 pcs., off-white	2 pcs., with ventilation, lagoon	included
B 22 10 017	D220, Version III	290	260	74	2 pcs., off-white	2 pcs., without ventilation, off-white	included
B 22 10 015	D220, Version IV	290	260	74	2 pcs., off-white	2 pcs., without ventilation, lagoon	included

ORDER DETAILS FOR KITS (for individual combination with side panels)

MEDITEC	Article	Supply
B 20 10 007	D220	L-shells	2 pieces, off-white, 290 x 260 x 74 mm, including assembly kit + 4 case feet
B 20 20 007	D220	Side trims 220	2 pieces, without ventilation, off-white
B 20 20 005			2 pieces, without ventilation, lagoon
B 20 21 007			2 pieces, with ventilation, off-white
B 20 21 005			2 pieces, with ventilation, lagoon

ORDER DETAILS ACCESSORIES

for MEDITEC...	Article	Version / Supply
B 20 30 007	D220	Side panels 220	for 50 mm additional height, off-white, 260 x 50 x 14 mm, 2 pieces with set of screws
B 21 29 307	D220	Front panel D flat	for case without side panels, moulded, off white, 271.2 x 55.6 x 3 mm, 1 piece
B 21 29 407	D220	Front panel D high	for case with two side panels, moulded, off white, 271.2 x 105.6 x 3 mm, 1 piece
A 91 99 008	D220	Set of screws	for mounting PCBs, ø 2,5 mm x 6 mm, 4 screws per set

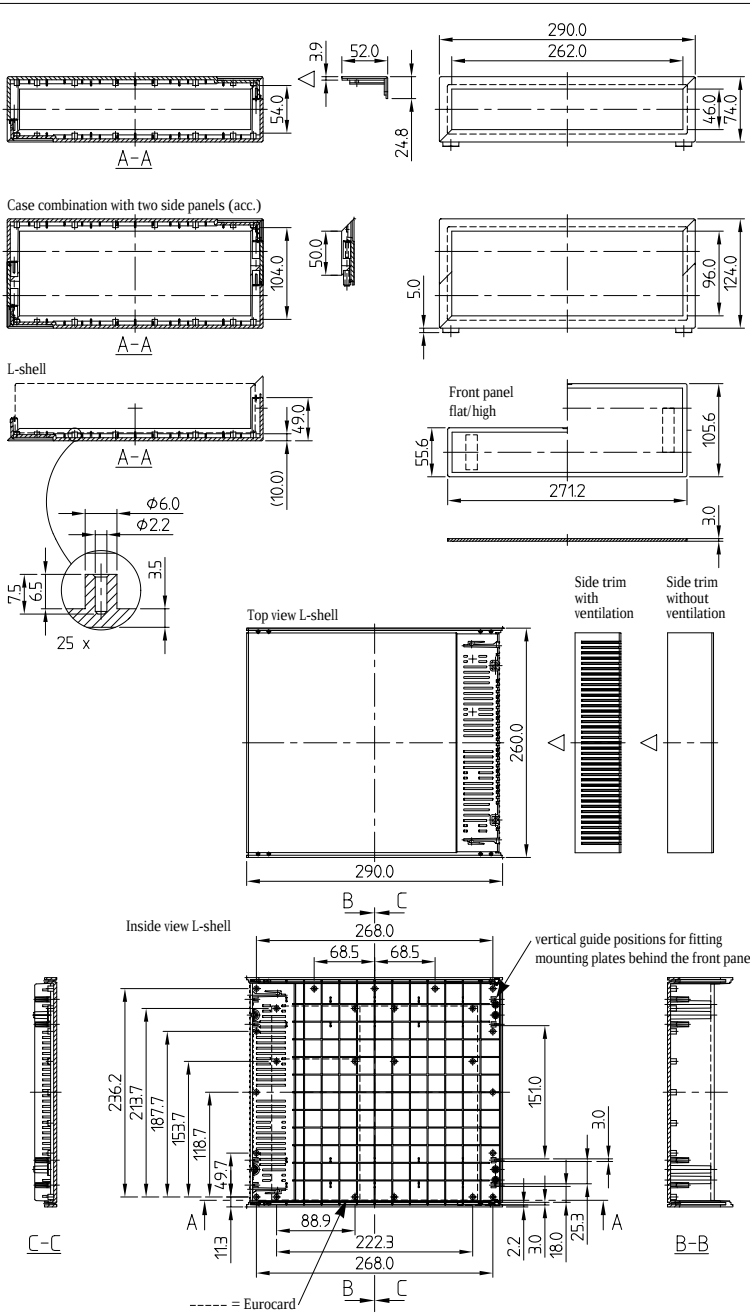



MEDITEC D220 Version I, side trims with ventilation, colour off-white.



MEDITEC D220 Version II, side trims with ventilation, colour lagoon.



MEDITEC D220 Version III, side trims without ventilation, colour off-white.



MEDITEC D220 Version IV, side trims without ventilation, colour lagoon.

MEDITEC D160

MEDITEC D160 – case dimension ideally fsuited to accommodate double-Eurocards 233.4 x 160 mm.



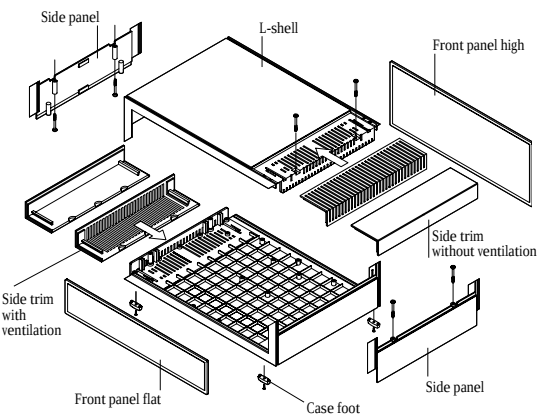

VERSION I

Complete case,
side trims with ventilation,
colour off-white.

VERSION II

Complete case,
side trims with ventilation,
colour lagoon.

VERSION III

Complete case,
side trims without ventilation,
Farbe grauweiß.

VERSION IV

Complete case,
side trims without ventilation,
colour lagoon.

DESIGN

L-shell technology. Two identical shells are joint together so that they overlap. The grid provides a high amount of stability. Fastening towers have been positioned for mounting Eurocards. Injection moulded front panels (accessory) in case colour, easily machined. Recessed, vertical guides for further assembly or installation of front panels. The height can be increased by 50 mm when fitting the accessory side panels. Side trims optionally available with or without ventilation.

ASSEMBLY

L-shells and side panels are mounted with self-tapping screws of stainless steel. The side trims are attached laterally and keep their position independently. Non-slipping case feet are fixed by screws to ensure a firm and stable support.

ORDER DETAILS COMPLETE CASE

Part No.	MEDITEC	Outside dimensions in mm			Supply		
		L	W	H	L-shells	Side trims	Assembly Kit + Feet
B 22 11 007	D160, Version I	290	200	74	2 pcs., off-white	2 pcs., with ventilation, off-white	included
B 22 11 005	D160, Version II	290	200	74	2 pcs., off-white	2 pcs., with ventilation, lagoon	included
B 22 11 017	D160, Version III	290	200	74	2 pcs., off-white	2 pcs., without ventilation, off-white	included
B 22 11 015	D160, Version IV	290	200	74	2 pcs., off-white	2 pcs., without ventilation, lagoon	included

ORDER DETAILS FOR KITS (for individual combination with side panels)

MEDITEC	Article	Supply
B 20 11 007	D160	L-shells	2 pieces, off-white, 290 x 200 x 74 mm, including assembly kit + 4 case feet
B 20 22 007	D160	Side trims 160	2 pieces, without ventilation, off-white
B 20 22 005			2 pieces, without ventilation, lagoon
B 20 23 007			2 pieces, with ventilation, off-white
B 20 23 005			2 pieces, with ventilation, lagoon

ORDER DETAILS ACCESSORIES

for MEDITEC…	Article	Version / Supply
B 20 31 007	D160	Side panels 160	for 50 mm additional height, off-white, 200 x 50 x 14 mm, 2 pieces with set of screws
B 21 29 307	D160	Front panel D flat	for case without side panels, moulded, off-white, 271.2 x 55.6 x 3 mm, 1 piece
B 21 29 407	D160	Front panel D high	for case with two side panels, moulded, off-white, 271.2 x 105.6 x 3 mm, 1 piece
A 91 99 008	D160	Set of screws	for mounting PCBs, ø 2.5 mm x 6 mm, 4 screws per set

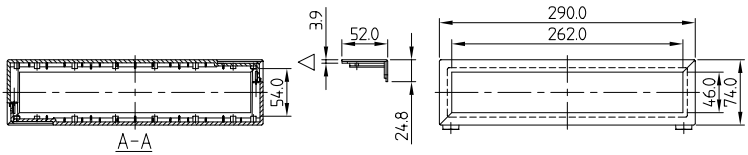

Case combination with two side panels (acc.)

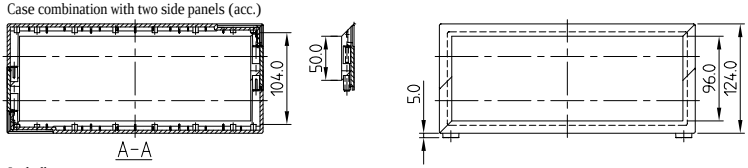

L-shell

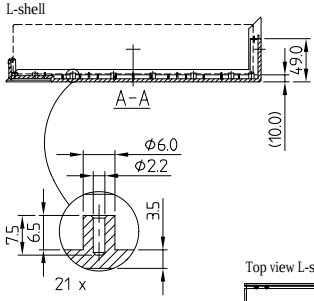

Front panel
flat/high

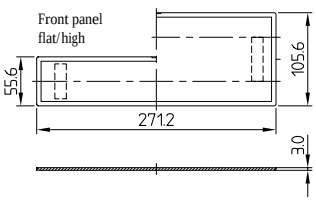

Top view L-shell

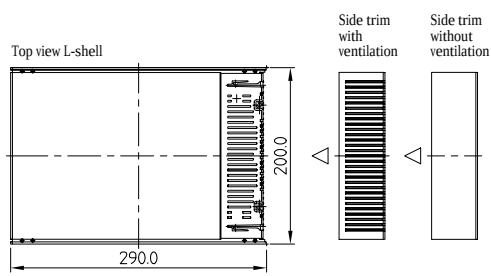

Inside view L-shell

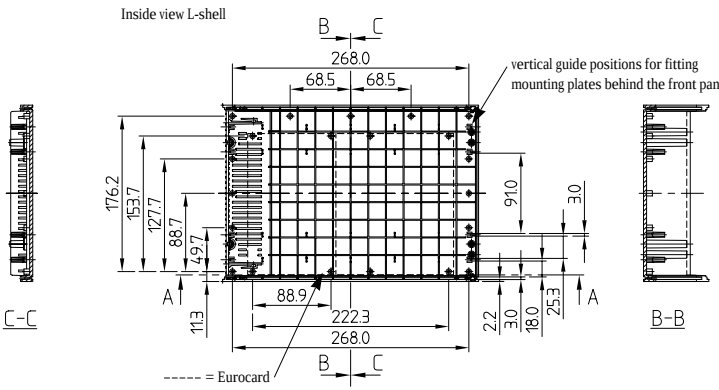



MEDITEC D160 Version I, side trims with ventilation colour off-white.



MEDITEC D160 Version II, side trims with ventilation colour lagoon.



MEDITEC D160 Version III, side trims without ventilation, colour off-white.



MEDITEC D160 Version IV, side trims without ventilation, colour lagoon.

MEDITEC E220

MEDITEC E220 – case dimension ideally suited to accommodate single-Eurocards 100 x 220 mm or 100 x160 mm



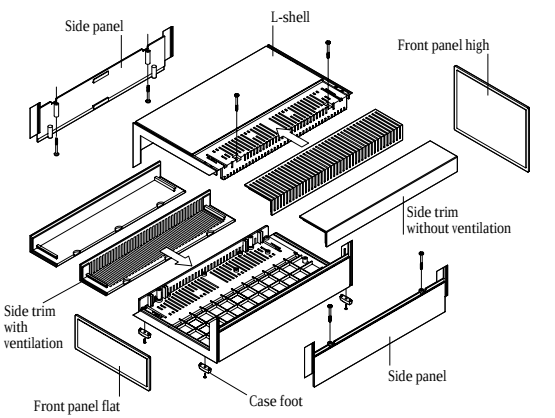

VERSION I

Complete case,
side trims with ventilation,
colour off-white.

VERSION II

Complete case,
side trims with ventilation,
colour lagoon.

VERSION III

Complete case,
side trims without ventilation,
colour off-white.

VERSION IV

Complete case,
side trims without ventilation,
colour lagoon.

DESIGN

L-shell technology. Two identical shells are joint together so that they overlap. The grid provides a high amount of stability. Fastening towers have been positioned for mounting Eurocards. Injection moulded front panels (accessory) in case colour, easily machined. Recessed, vertical guides for further assembly or installation of front panels. The height can be increased by 50 mm when fitting the accessory side panels. Side trims optionally available with or without ventilation.

ASSEMBLY

L-shells and side panels are mounted with self-tapping screws of stainless steel. The side trims are attached laterally and keep their position independently. Non-slipping case feet are fixed by screws to ensure a firm and stable support.

ORDER DETAILS COMPLETE CASE

Part No.	MEDITEC	Outside dimensions in mm			Supply		
		L	W	H	L-shells	Side trims	Assembly Kit + Feet
B 22 12 007	E220, Version I	160	260	74	2 pcs., off-white	2 pcs., with ventilation, off-white	included
B 22 12 005	E220, Version II	160	260	74	2 pcs., off-white	2 pcs., with ventilation, lagoon	included
B 22 12 017	E220, Version III	160	260	74	2 pcs., off-white	2 pcs., without ventilation, off-white	included.
B 22 12 015	E220, Version IV	160	260	74	2 pcs., off-white	2 pcs., without ventilation, lagoon	included

ORDER DETAILS FOR KITS (for individual combination with intermediate parts)

MEDITEC	Article	Supply
B 20 12 007	E220	L-shells	2 pieces, off-white, 160 x 260 x 74 mm, including assembly kit + 4 case feet
B 20 20 007	E220	Side trims 220	2 pieces, without ventilation, off-white
B 20 20 005			2 pieces, without ventilation, lagoon
B 20 21 007			2 pieces, with ventilation, off-white
B 20 21 005			2 pieces, with ventilation, lagoon

ORDER DETAILS ACCESSORIES

for MEDITEC…	Article	Version / Supply
B 20 30 007	E220	Side panels 220	for 50 mm additional height, off-white, 260 x 50 x 14 mm, 2 pieces with set of screws
B 21 16 307	E220	Front panel E flat	for case without side panels, moulded, off-white, 140.8 x 55.6 x 3 mm, 1 piece
B 21 16 407	E220	Front panel E high	for case with two side panels, moulded, off-white, 140.8 x 105.6 x 3 mm, 1 piece
A 91 99 008	E220	Set of screws	for mounting PCBs, ø 2.5 mm x 6 mm, 4 screws per set

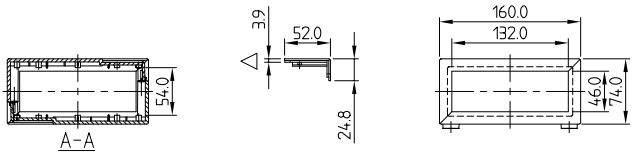

Case combination with two side panels (acc.)

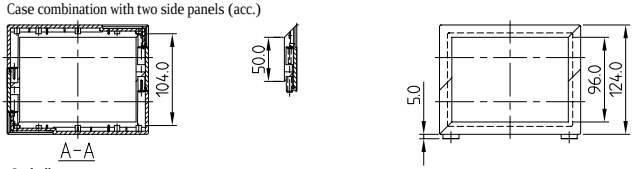

L-shell

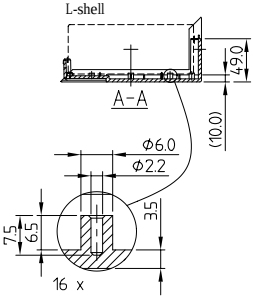

Front panel flat/high

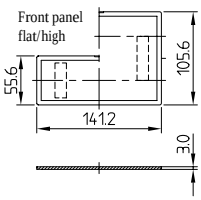

Top view L-shell

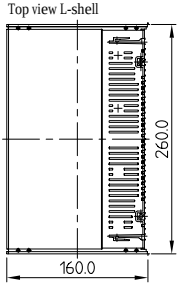

Side trim with ventilation

Side trim without ventilation

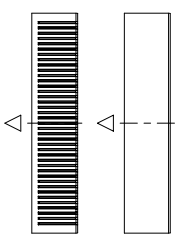

Inside view L-shell

vertical guide positions for fitting mounting plates behind the front panel

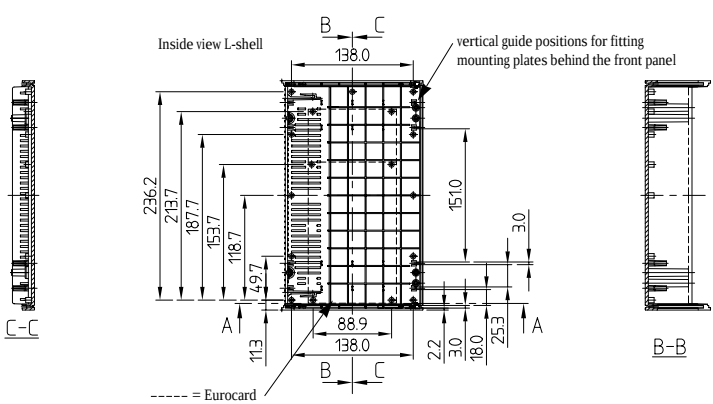



MEDITEC E220 Version I, side trims with ventilation, colour off-white.



MEDITEC E220 Version II, side trims with ventilation, colour lagoon.



MEDITEC E220 Version III, side trims without ventilation, colour off-white.



MEDITEC E220 Version IV, side trims without ventilation, colour lagoon.