E12774

Wirable socket

SDOGB050ZDSFKPG

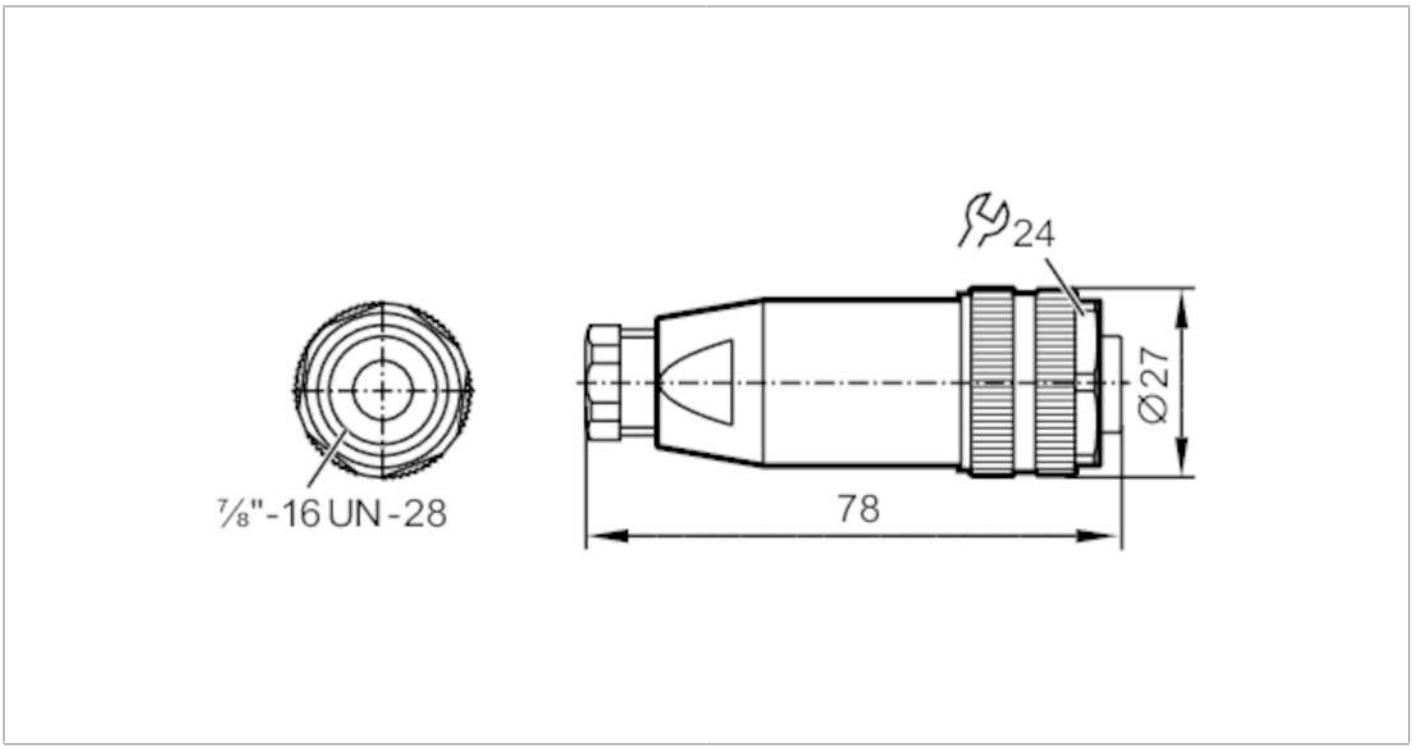

Application		
Special feature		Free from silicone; Gold-plated contacts
Free from silicone		yes
Electrical data		
Operating voltage	[V]	< 300 AC/DC
Protection class		II
Max. current load total	[A]	9
Operating conditions		
Ambient temperature	[°C]	-25...85
Protection		IP 67
Mechanical data		
Weight	[g]	48.808
Moulded-body material		PBT
Material nut		diecast zinc, nickel-plated
Remarks		
Pack quantity		1 pcs.

E12774

Wirable socket

SDOGB050ZDSFKPG

Electrical connection

screw terminals: ...1.5 mm²; Cable sheath: Ø 6...8 mm; AWG 16

Electrical connection - socket

Connector: 1 x 7/8", straight; Moulded body: PBT; Locking: diecast zinc, nickel-plated; Contacts: gold-plated



Connection

