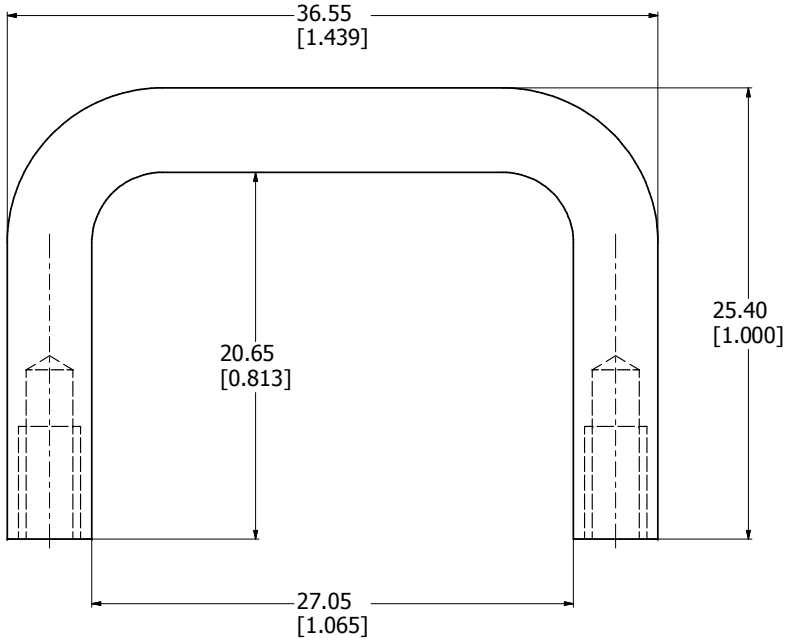

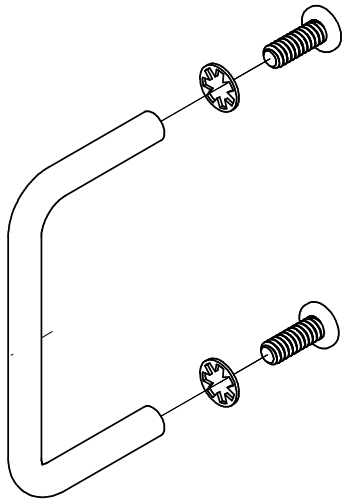

TYPICAL HANDLE ASSEMBLY

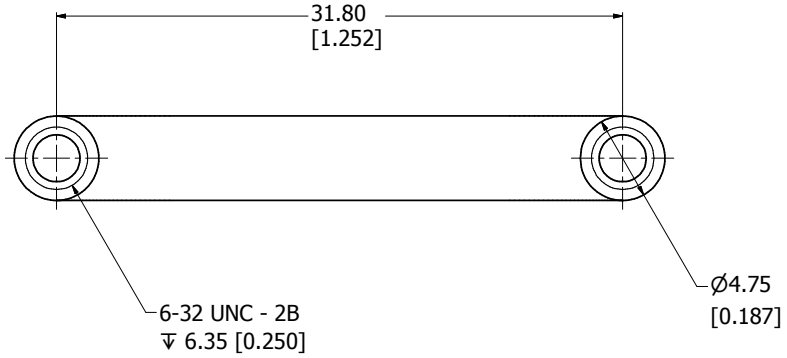

1427B2
Handle Material - CR Steel
Finish - Bright Chrome Plated (1427B2)
- E-Black Coating (1427B2BK-1)
Hardware
2 Screws - Panhead 6-32 x 3/8"
2 Internal Tooth Lockwashers
**note handle sold singly

HAMMOND MANUFACTURING™

1427B2***