DATASHEET

BU-62S-@

(Silicone Insulator for BU-60 Series Alligator Clips)

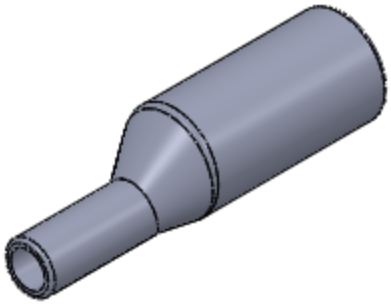

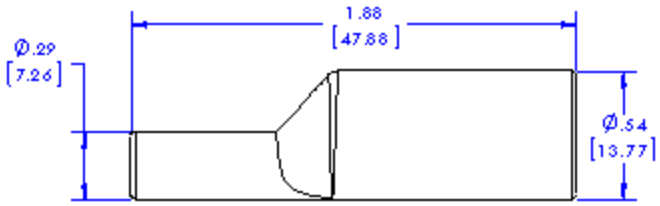

- The BU-62S is used to Insulate BU-60, BU-60C, BU-60S, BU-60CS, BU-60TBO, BU-60X and BU-61 Series clips from foreign objects.

- Material: Flexible, high temperature silicone
- Dielectric Strength: 3KV at thinnest cross section.
- Operating temperature: -40°F (-40°C) to 356°F (180°C)

- Length = 1.9”(48mm), Large ID = .54”(13.7mm), Wire end ID = .29”(7.4mm)

- Color: “@” in part number is color. Available colors are:
  -0 Black, -2 Red,

- RoHS Compliant

Mueller Electric Company
1208 Massillon Rd. Ste. N-1500
Akron, OH 44306-4524

www.muellerelectric.com

Toll Free: 800.955.2629
Phone: 330.780.2525
Fax: 330.780.2524