

Star-delta contactor combination, 7.5kW/400V/AC3

Part no. SDAINLM16(400V50HZ)
Catalog No. 101381
Eaton Catalog No. XTSD016B10N

Powering Business Worldwide

Delivery program

Product range			Contactor combinations
Application			Star-delta motor starting for contactor combinations
Accessories			Star-delta combinations SDAINL
Utilization category			NAC-3: Normal AC induction motors: starting, switch off during running
			IE3
Notes			Also suitable for motors with efficiency class IE3. IE3-ready devices are identified by the logo on their packaging.
Description			Operating frequency: maximum 30 starts per hour
Rated operational current			
AC-3			
380 V 400 V	I_e	A	16
Max. rating for three-phase motors, 50 - 60 Hz			
AC-3			
220 V 230 V	P	kW	4
380 V 400 V	P	kW	7.5
500 V	P	kW	7.5
660 V 690 V	P	kW	7.5
Max. changeover time		s	20
Actuating voltage			400 V 50 Hz
Voltage AC/DC			AC operation
Individual components of the combination			
Mains contactor Q11		Part no.	DILM9-10 + DILA-XHI20
Delta contactor Q15		Part no.	DILM9-01 + DILA-XHI20
Star contactor Q13		Part no.	DILM7-01 + DILA-XHI20
Timing relay K1		Part no.	ETR4-51
Spare auxiliary contacts			

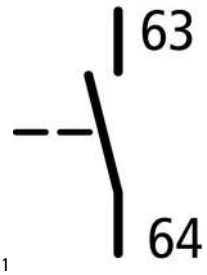

Q11

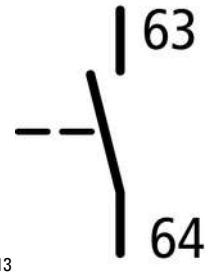

Q13

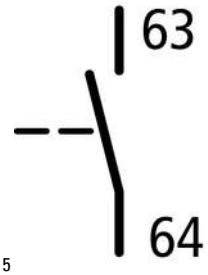

Q15

Design verification as per IEC/EN 61439

Technical data for design verification			
Rated operational current for specified heat dissipation	I_n	A	9.28
Heat dissipation per pole, current-dependent	P_{vid}	W	0.94
Equipment heat dissipation, current-dependent	P_{vid}	W	2.82
Static heat dissipation, non-current-dependent	P_{vs}	W	3.3
Heat dissipation capacity	P_{diss}	W	0
Operating ambient temperature max.		°C	-25
Operating ambient temperature max.		°C	60
IEC/EN 61439 design verification			
10.2 Strength of materials and parts			
10.2.2 Corrosion resistance			Meets the product standard's requirements.
10.2.3.1 Verification of thermal stability of enclosures			Meets the product standard's requirements.
10.2.3.2 Verification of resistance of insulating materials to normal heat			Meets the product standard's requirements.
10.2.3.3 Verification of resistance of insulating materials to abnormal heat and fire due to internal electric effects			Meets the product standard's requirements.
10.2.4 Resistance to ultra-violet (UV) radiation			Meets the product standard's requirements.
10.2.5 Lifting			Does not apply, since the entire switchgear needs to be evaluated.
10.2.6 Mechanical impact			Does not apply, since the entire switchgear needs to be evaluated.
10.2.7 Inscriptions			Meets the product standard's requirements.
10.3 Degree of protection of ASSEMBLIES			Does not apply, since the entire switchgear needs to be evaluated.
10.4 Clearances and creepage distances			Meets the product standard's requirements.
10.5 Protection against electric shock			Does not apply, since the entire switchgear needs to be evaluated.
10.6 Incorporation of switching devices and components			Does not apply, since the entire switchgear needs to be evaluated.
10.7 Internal electrical circuits and connections			Is the panel builder's responsibility.
10.8 Connections for external conductors			Is the panel builder's responsibility.
10.9 Insulation properties			
10.9.2 Power-frequency electric strength			Is the panel builder's responsibility.
10.9.3 Impulse withstand voltage			Is the panel builder's responsibility.
10.9.4 Testing of enclosures made of insulating material			Is the panel builder's responsibility.
10.10 Temperature rise			The panel builder is responsible for the temperature rise calculation. Eaton will provide heat dissipation data for the devices.
10.11 Short-circuit rating			Is the panel builder's responsibility. The specifications for the switchgear must be observed.
10.12 Electromagnetic compatibility			Is the panel builder's responsibility. The specifications for the switchgear must be observed.
10.13 Mechanical function			The device meets the requirements, provided the information in the instruction leaflet (IL) is observed.

Technical data ETIM 6.0

Low-voltage industrial components (EG000017) / Combination of contactors (EC000010)			
Electric engineering, automation, process control engineering / Low-voltage switch technology / Contactor (LV) / Combination of contactor (ecl@ss8.1-27-37-10-09 [AGZ572011])			
Function			Star-delta contactor
Rated control supply voltage Us at AC 50HZ		V	400 - 400
Rated control supply voltage Us at AC 60HZ		V	0 - 0
Rated control supply voltage Us at DC		V	0 - 0
Voltage type for actuating			AC
Rated operation current Ie at AC-3, 400 V		A	16

Rated operation power at AC-3, 400 V		kW	7.5
Type of electrical connection of main circuit			Screw connection
Degree of protection (IP)			IP20

Characteristics

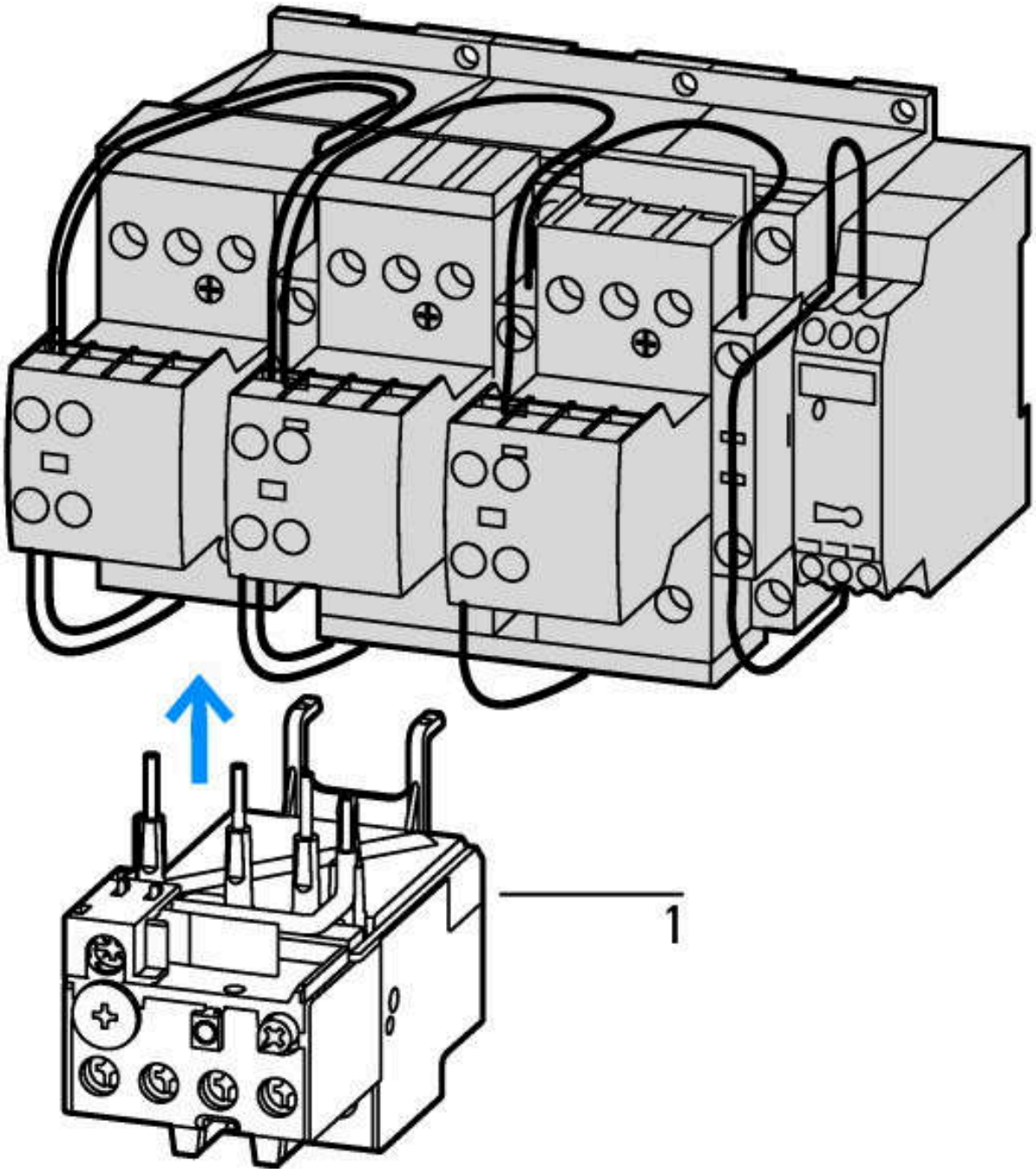

1: Overload relay

Dimensions

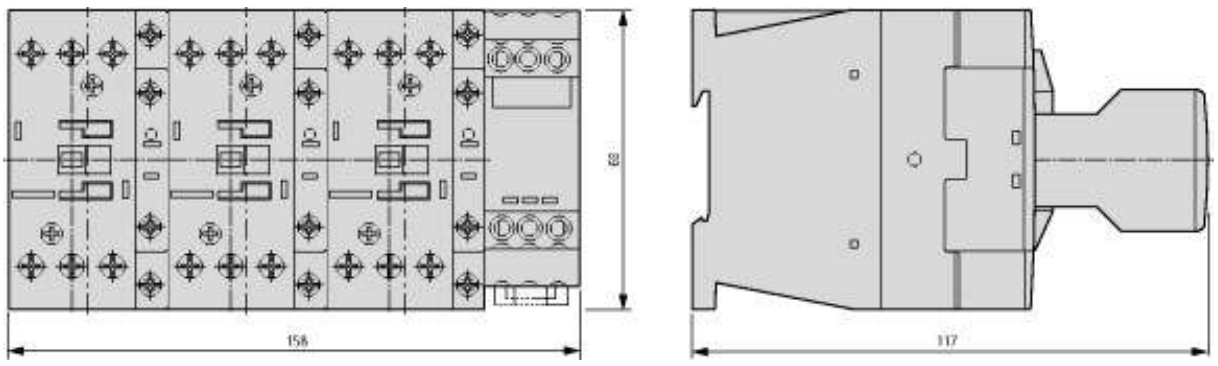

Basic unit with auxiliary contact module

Assets (Links)

Declaration of Conformity

00002560

Instruction Leaflets

IL03407030Z2011_07

Additional product information (links)

IL03407030Z (AWA2100-2139) Wiring for contactor combinations	
IL03407030Z (AWA2100-2139) Wiring for contactor combinations	ftp://ftp.moeller.net/DOCUMENTATION/AWA_INSTRUCTIONS/IL03407030Z2011_07.pdf

© 01/2018 by Eaton Industries GmbH